

Jet Hi-Tech 100 T

Extract fans

- Casing material: Plastic
- Timer: Turn off timer

	Unit of measurement	Jet Hi-Tech 100 T
Minimum supply voltage	V	220
Maximum supply voltage	V	240
Power supply frequency	Hz	50
Maximum airflow	m³/h	95
Ambient air temperature min	°C	1
Ambient air temperature max	°C	40
Ingress protection rating	-	IP24
Impeller material	-	Plastic

Dimensions

a	b	c	Ø d	e
150	122	125	98	36

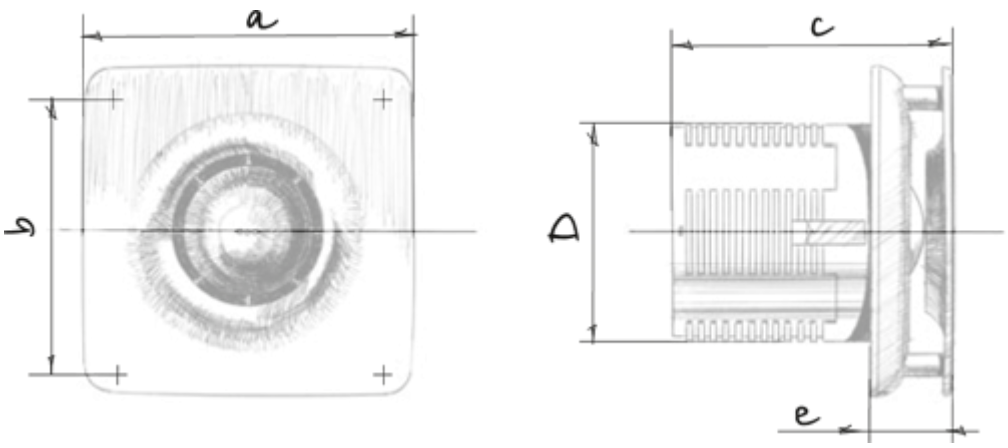

Accessories

Speed controllers

Name	Photo	Description
CDT E1.8		Thyristor speed controller