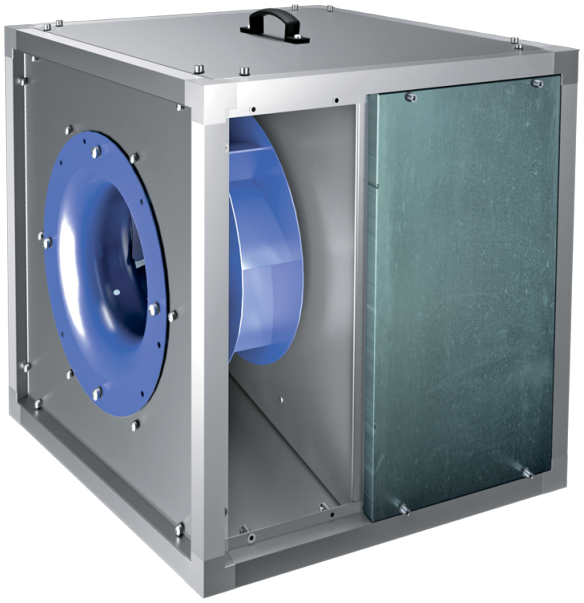

Iso-VK 560 4D

Kitchen inline fans in sound-insulated casings with operational temperature of 120 °C

- Sound-insulated casing
- Impeller type: Centrifugal impeller with backward curved blades
- Casing material: Aluzinc
- Installation in any position

	Unit of measurement	Iso-VK 560 4D
Phases	-	3
Minimum supply voltage	V	400
Maximum supply voltage	V	400
Power supply frequency	Hz	50
Maximum airflow	m^3/h	12750
Weight	kg	130.3
Transported air temperature (max)	°C	120
Transported air temperature (min)	°C	-25
Ingress protection rating	-	IPX4
Impeller material	-	Steel
Size	mm	560

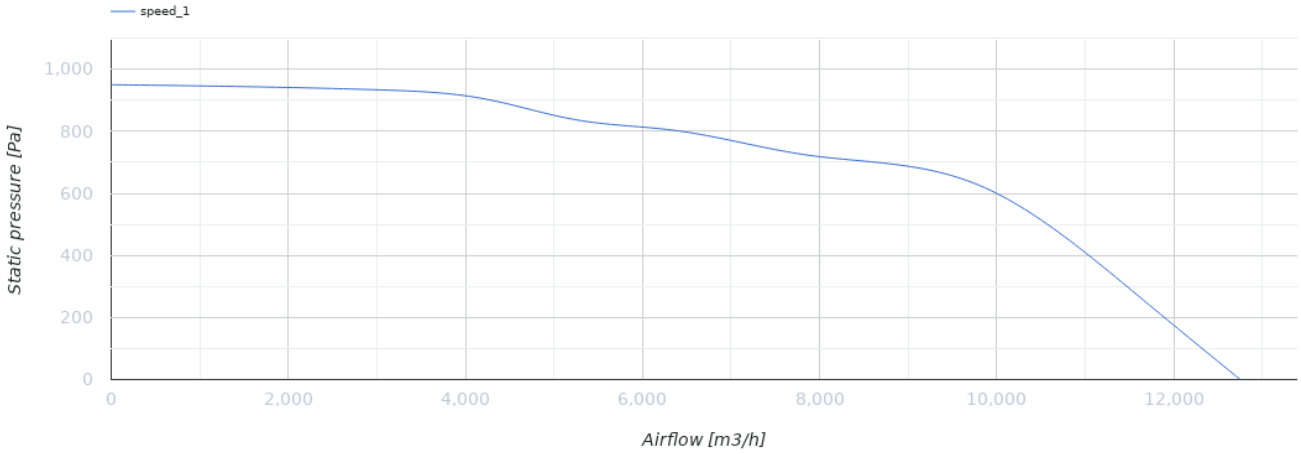
speed_1
1,000
800
600
400
200
0
Static pressure [Pa]
0
2,000
4,000
6,000
8,000
10,000
12,000
Airflow [m3/h]

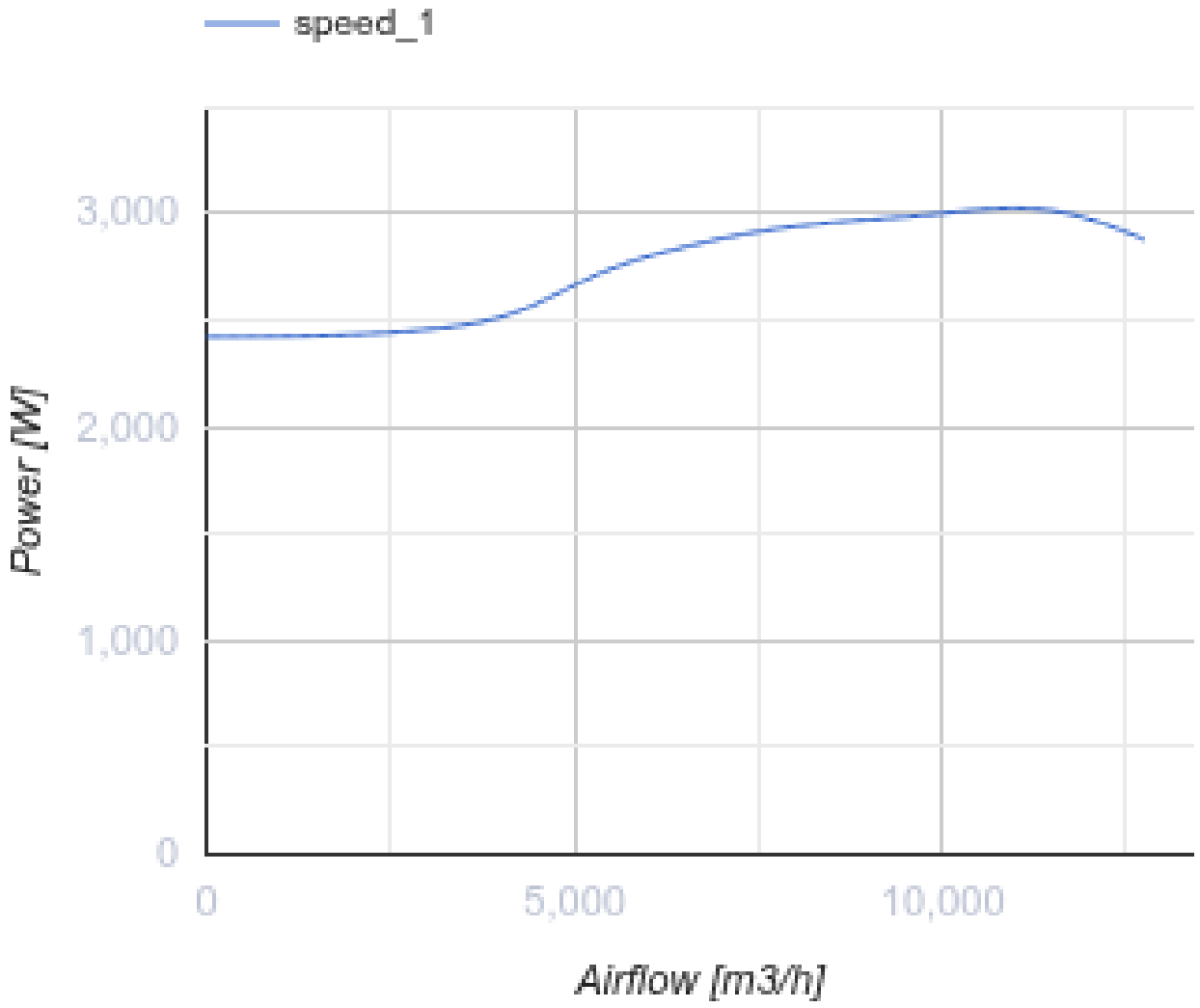
speed_1
3,000
2,000
1,000
0
Power [W]
0
5,000
10,000
Airflow [m3/h]

Dimensions

H	H1	H2	L	L1	W	W1	W2
900	938	840	900	938	900	938	365

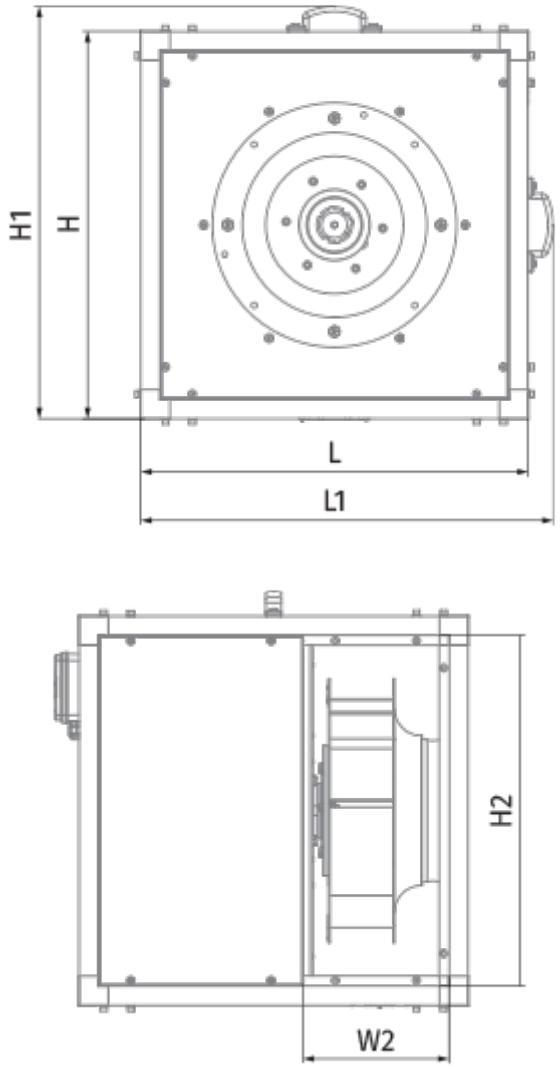

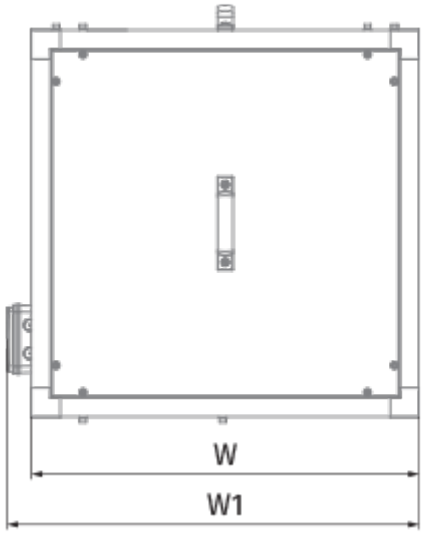
W
W1