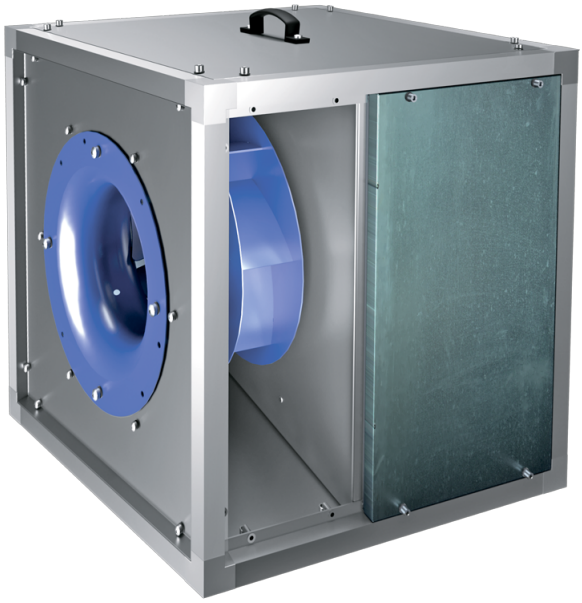

Iso-VK 450 4D

Kitchen inline fans in sound-insulated casings with operational temperature of 120 °C

- Sound-insulated casing
- Impeller type: Centrifugal impeller with backward curved blades
- Casing material: Aluzinc
- Installation in any position

	Unit of measurement	Iso-VK 450 4D
Phases	-	3
Maximum supply voltage	V	400
Minimum supply voltage	V	400
Power supply frequency	Hz	50
Maximum airflow	m^3/h	5920
Weight	kg	73.3
Transported air temperature (max)	°C	120
Transported air temperature (min)	°C	-25
Ingress protection rating	-	IPX4
Impeller material	-	Steel
Size	mm	450

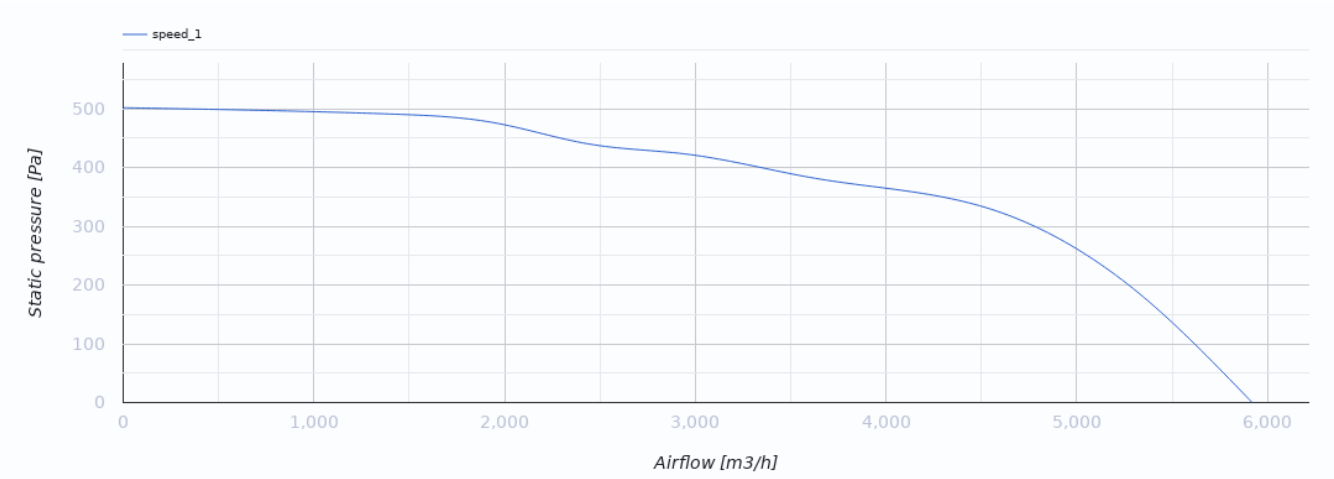

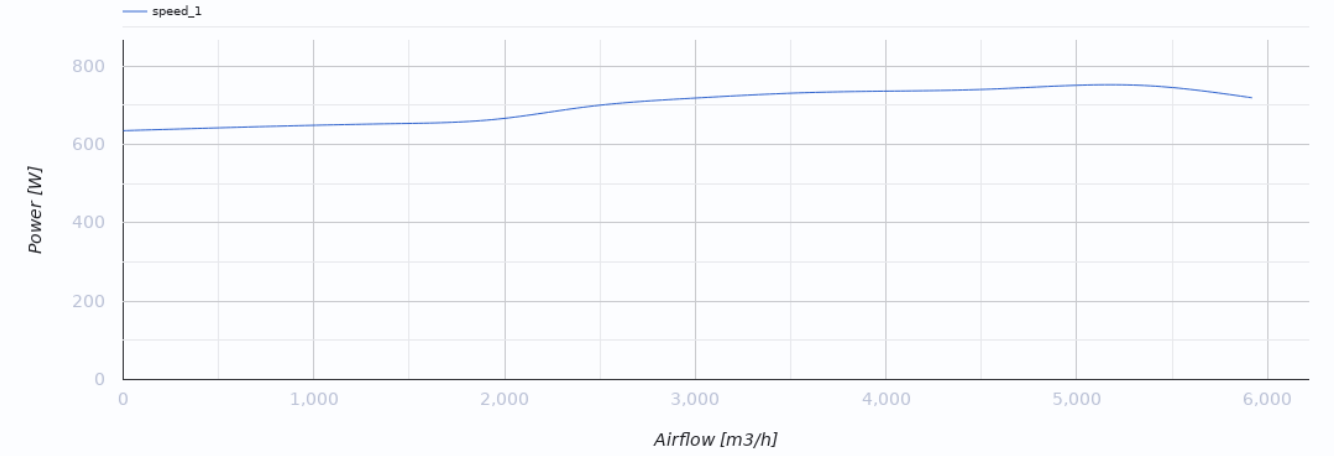

Dimensions

H	H1	H2	L	L1	W	W1	W2
700	738	640	700	738	700	738	282

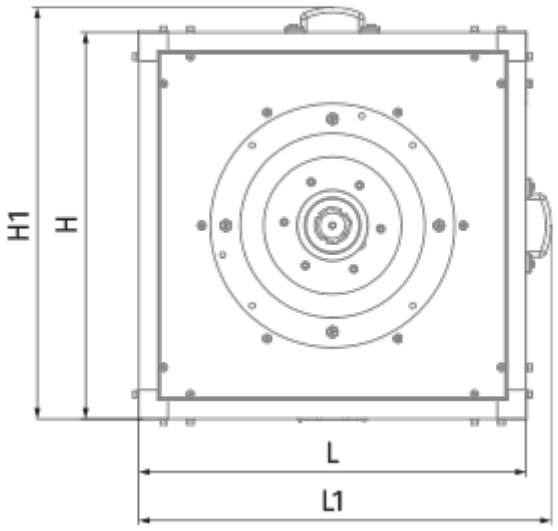
H1
H
L
L1

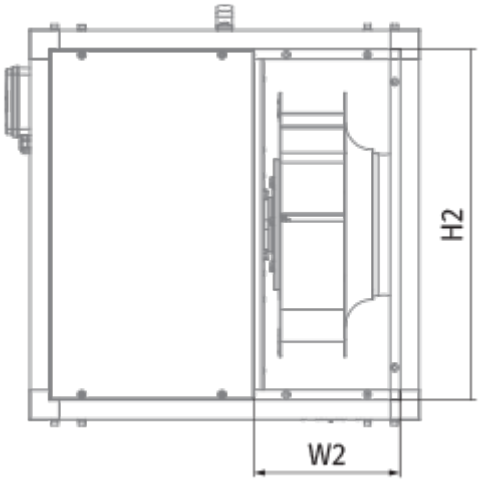
H2
W2

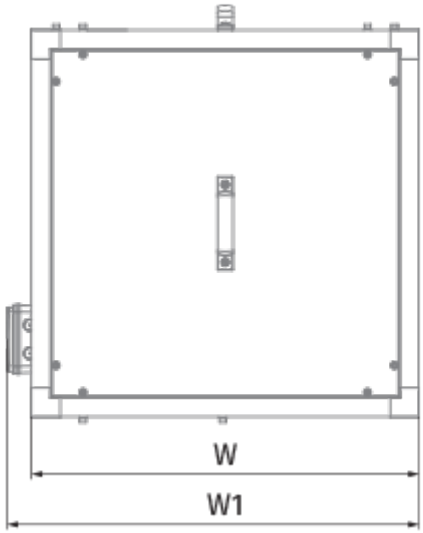
W
W1