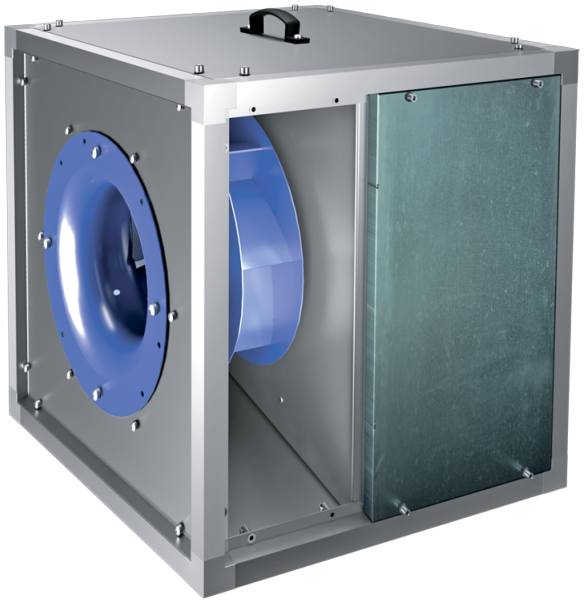

Iso-VK 400 4E (230/60)

Kitchen inline fans in sound-insulated casings with operational temperature of 120 °C

- Sound-insulated casing
- Impeller type: Centrifugal impeller with backward curved blades
- Casing material: Aluzinc
- Installation in any position

	Unit of measurement	Iso-VK 400 4E (230/60)
Phases	-	1
Minimum supply voltage	V	230
Maximum supply voltage	V	230
Power supply frequency	Hz	60
Weight	kg	60.3
Transported air temperature (max)	°C	120
Transported air temperature (min)	°C	-25
Ingress protection rating	-	IPX4
Impeller material	-	Steel
Size	mm	400

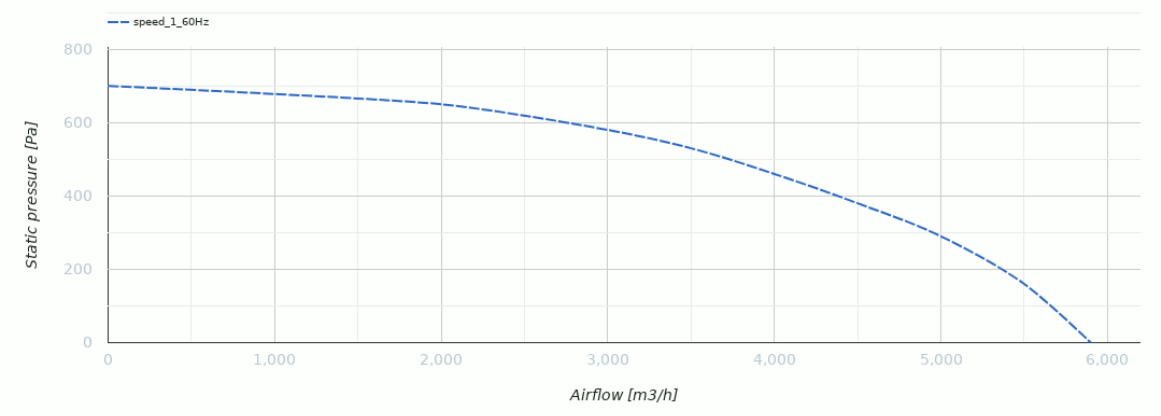

Dimensions

H	H1	L	L1	W	W1	W2	H2
670	708	670	708	670	708	252	610

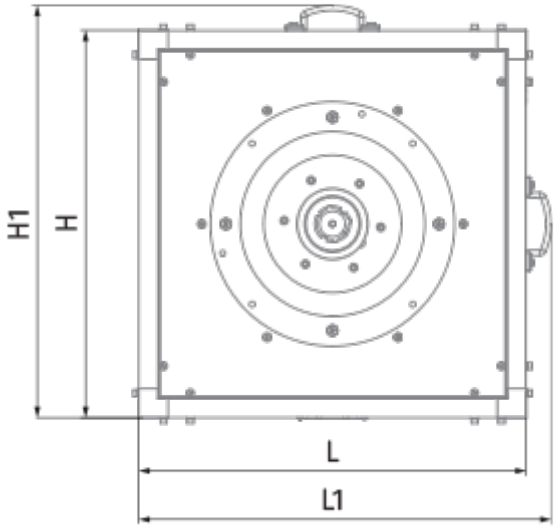

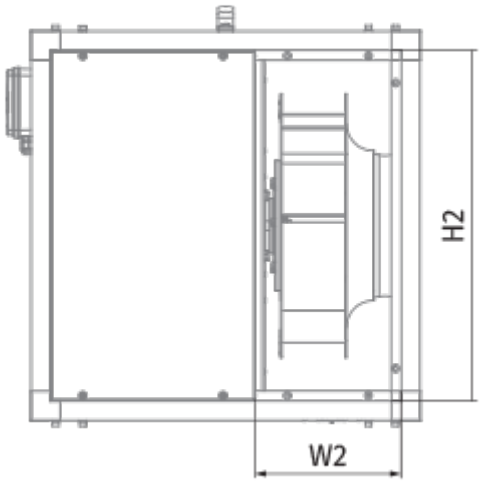

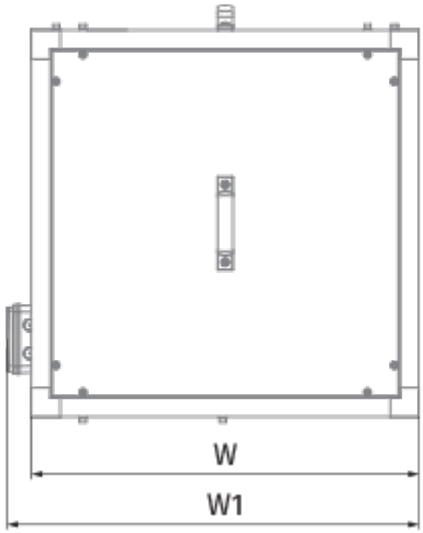
W
W1