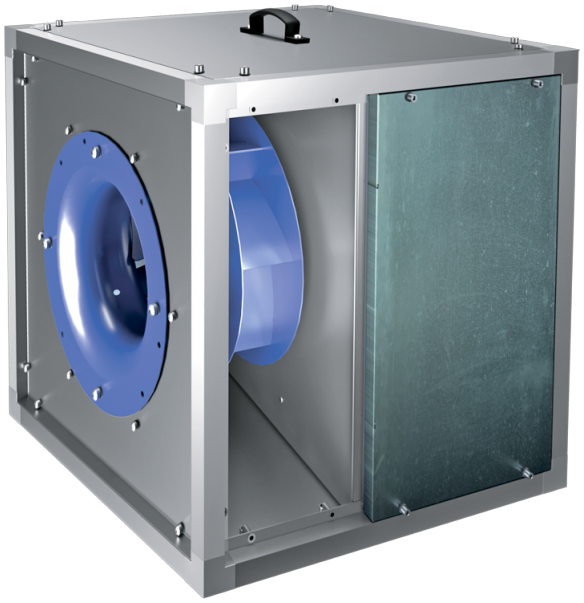

# Iso-VK 400 4D

Kitchen inline fans in sound-insulated casings with operational temperature of 120 °C

- Sound-insulated casing
- Impeller type: Centrifugal impeller with backward curved blades
- Casing material: Aluzinc
- Installation in any position

| | Unit of measurement | Iso-VK 400 4D |
|---|---|---|
| Phases | - | 3 |
| Minimum supply voltage | V | 400 |
| Maximum supply voltage | V | 400 |
| Power supply frequency | Hz | 50 |
| Maximum airflow | $m^3/h$ | 4550 |
| Weight | kg | 58.1 |
| Transported air temperature (max) | °C | 120 |
| Transported air temperature (min) | °C | -25 |
| Ingress protection rating | - | IPX4 |
| Impeller material | - | Steel |
| Size | mm | 400 |

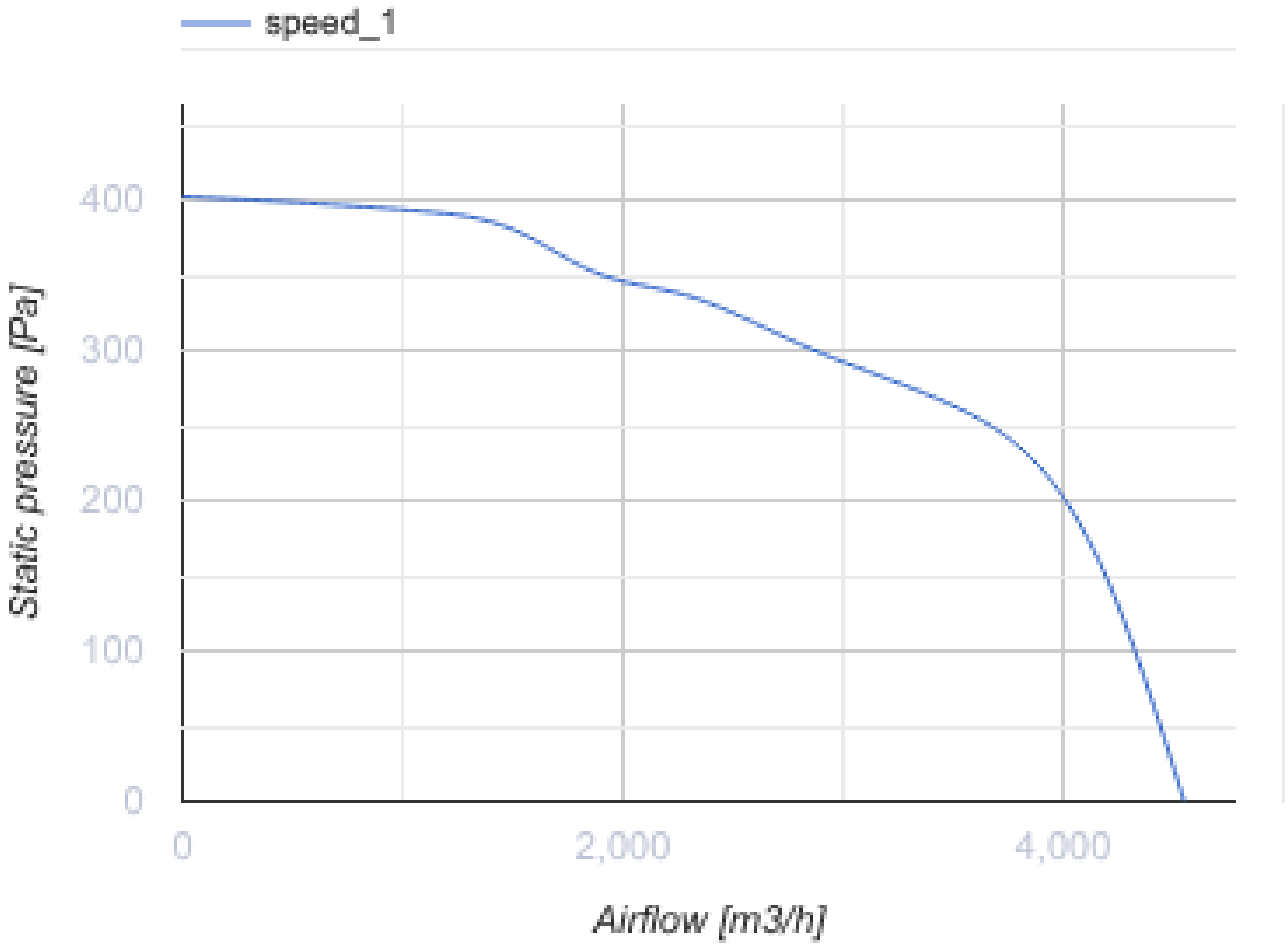
speed_1
Static pressure [Pa]
400
300
200
100
0
0
2,000
4,000
Airflow [m3/h]

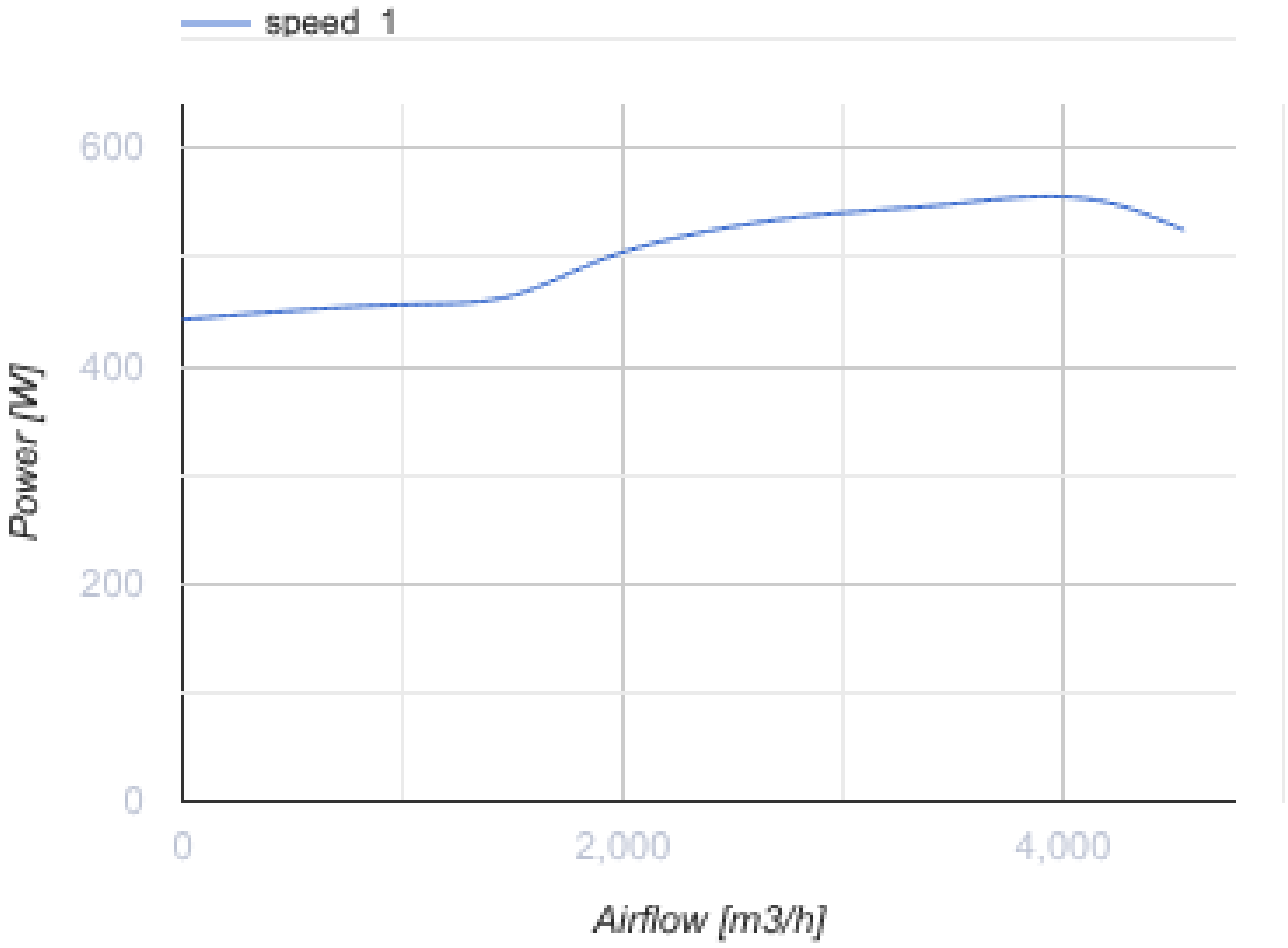


## Dimensions

| H | H1 | H2 | L | L1 | W | W1 | W2 |
|---|---|---|---|---|---|---|---|
| 670 | 708 | 610 | 670 | 708 | 670 | 708 | 252 |

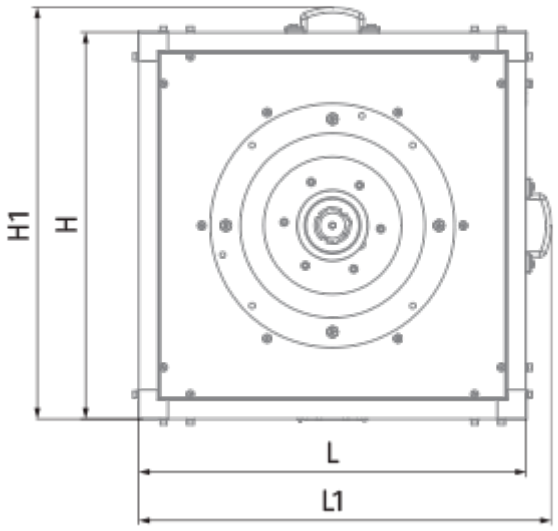
H1
H
L
L1

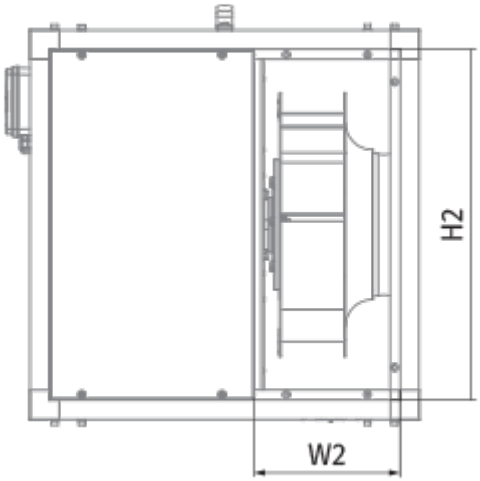
H2
W2

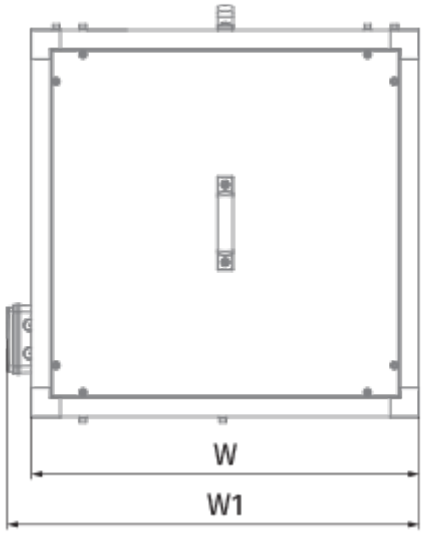
W
W1