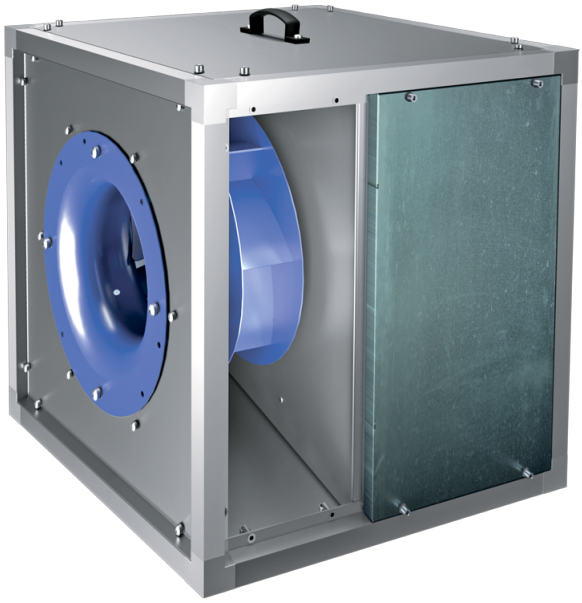

Iso-VK 355 4D

Kitchen inline fans in sound-insulated casings with operational temperature of 120 °C

- Sound-insulated casing
- Impeller type: Centrifugal impeller with backward curved blades
- Casing material: Aluzinc
- Installation in any position

	Unit of measurement	Iso-VK 355 4D
Phases	-	3
Minimum supply voltage	V	400
Maximum supply voltage	V	400
Power supply frequency	Hz	50
Maximum airflow	m^3/h	3200
Weight	kg	48.1
Transported air temperature (max)	°C	120
Transported air temperature (min)	°C	-25
Ingress protection rating	-	IPX4
Impeller material	-	Steel
Size	mm	355

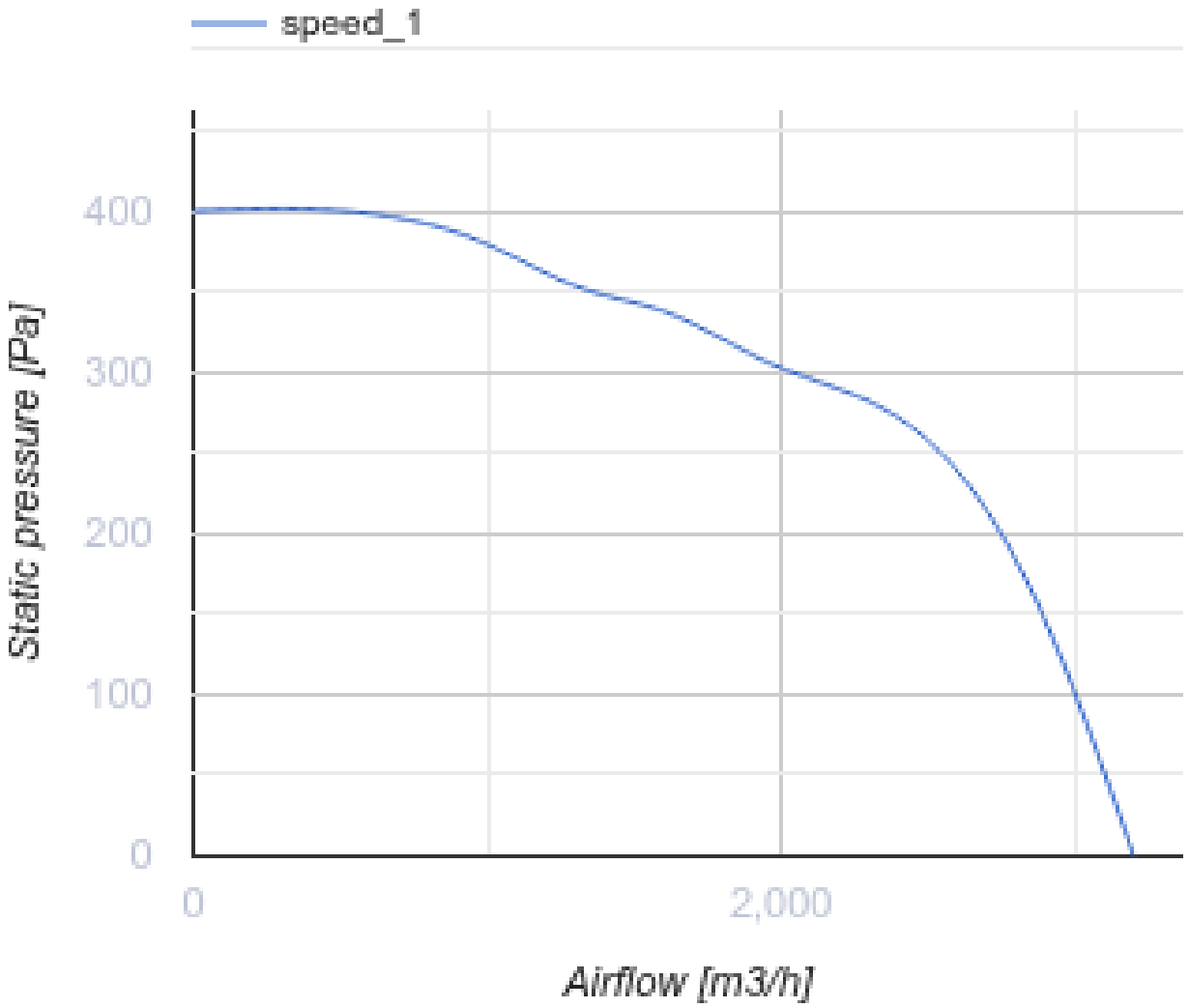
speed_1
400
300
200
100
0
Static pressure [Pa]
0
2,000
Airflow [m3/h]

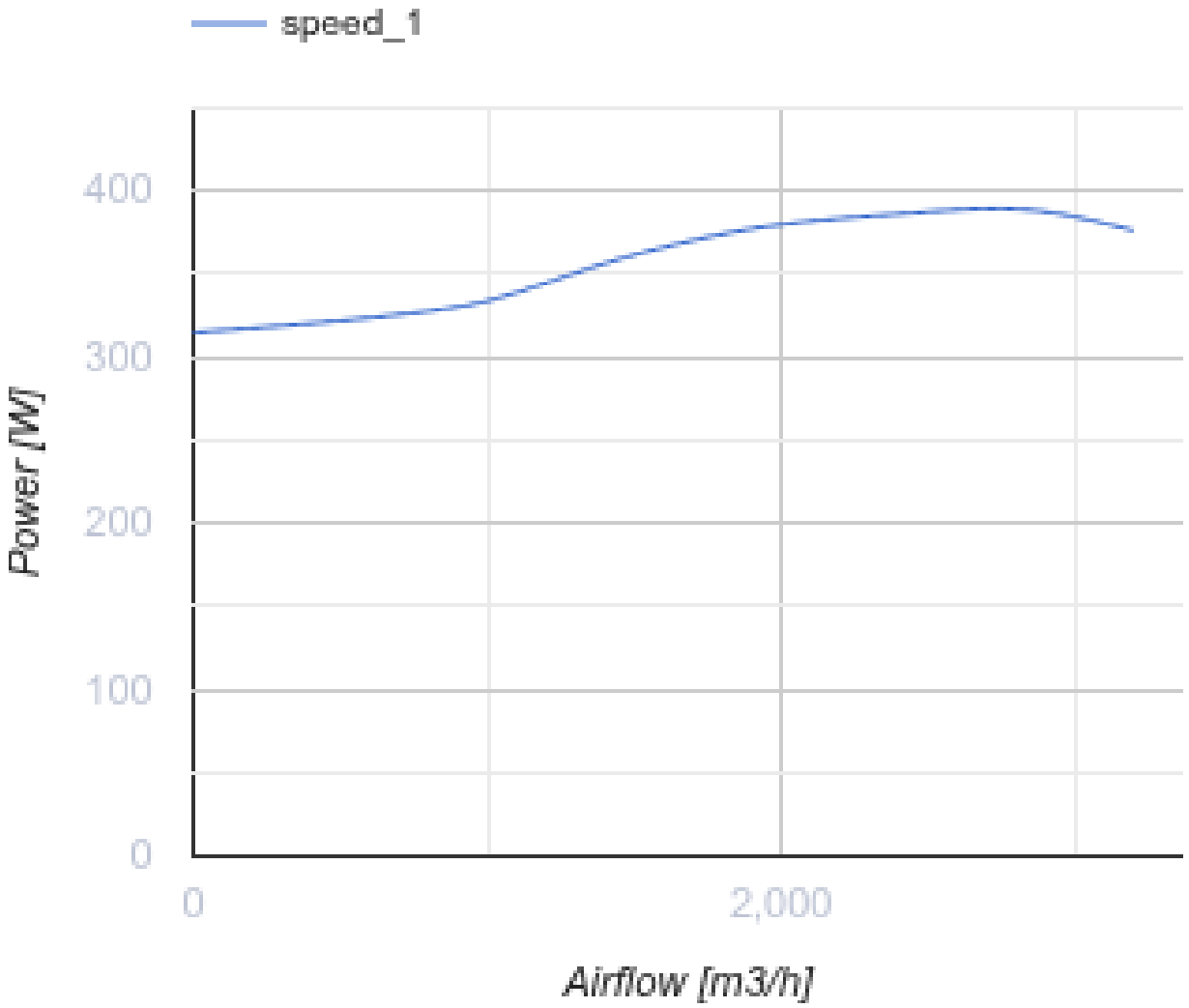

Dimensions

H	H1	H2	L	L1	W	W1	W2
600	638	540	600	638	600	638	225

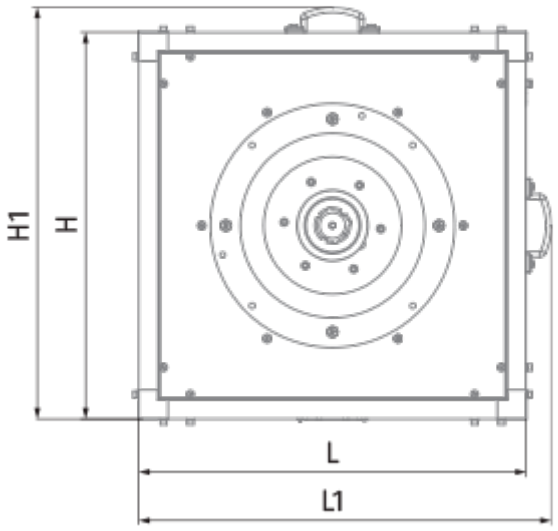
H1
H
L
L1

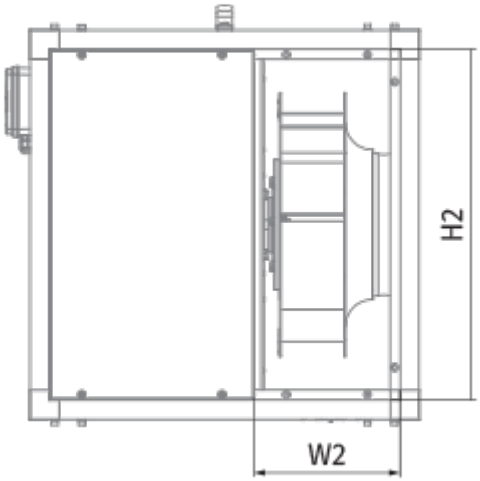
H2
W2

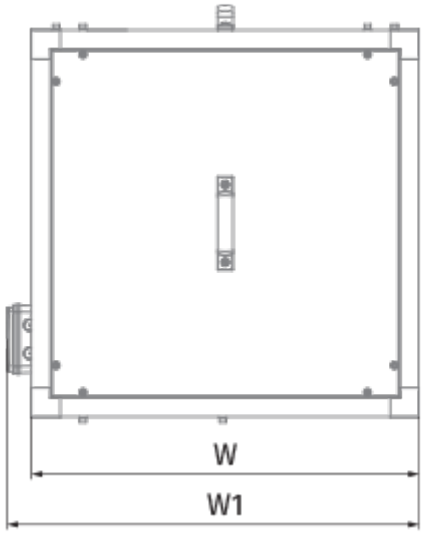
W
W1