

Iso-V EC 630

Centrifugal inline fans in sound-insulated casings with EC-motors

- Sound-insulated casing
- Impeller type: Centrifugal impeller with backward curved blades
- Casing material: Galvanized steel
- Installation in any position

	Unit of measurement	Iso-V EC 630
Phases	-	3
Minimum supply voltage	V	380
Maximum supply voltage	V	480
Power supply frequency	Hz	50/60
Maximum airflow	m³/h	16740
Weight	kg	69
Transported air temperature (max)	°C	55
Transported air temperature (min)	°C	-25
Ingress protection rating	-	IPX4
Impeller material	-	Plastic

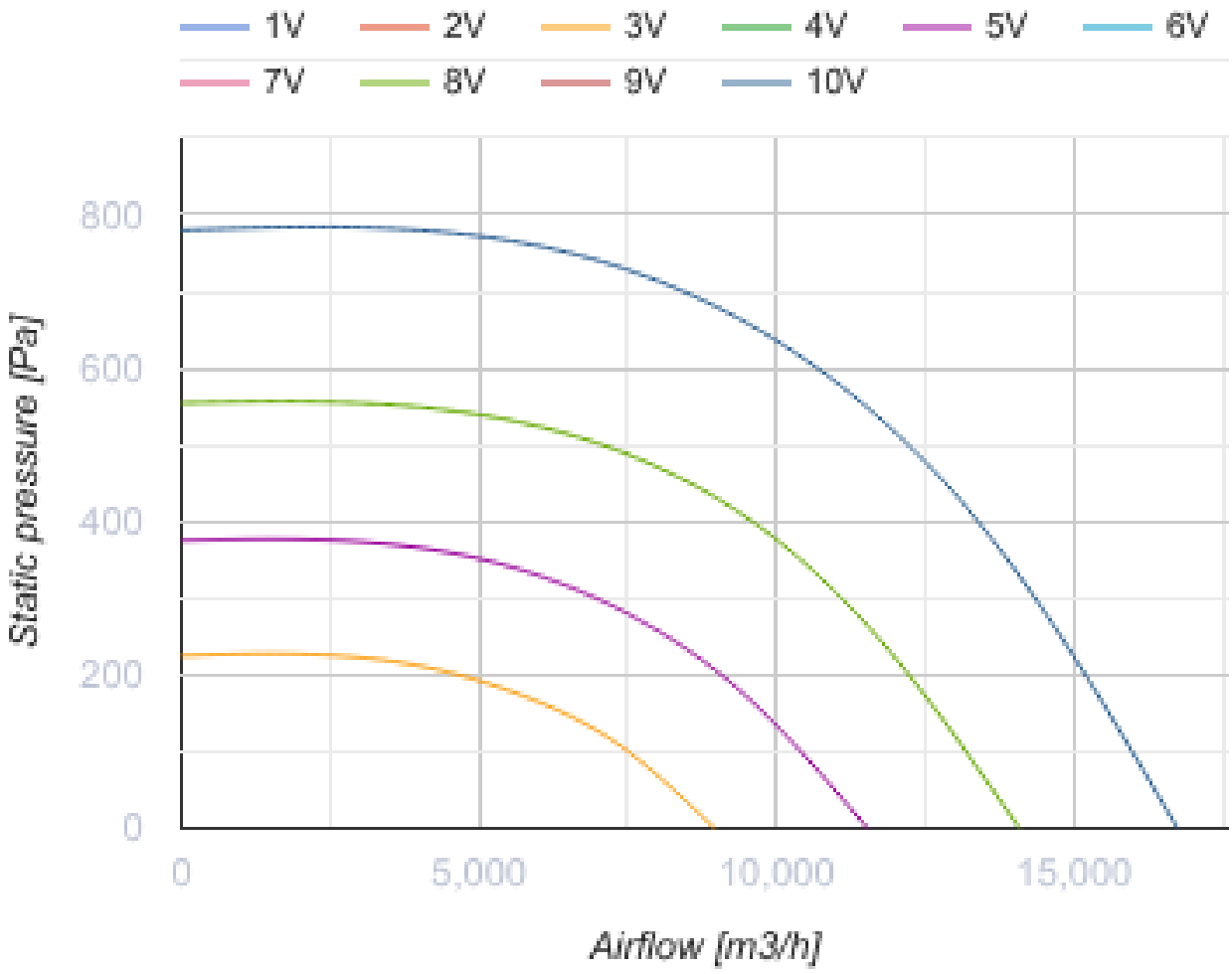
1V
2V
3V
4V
5V
6V
7V
8V
9V
10V
800
600
400
200
0
Static pressure [Pa]
0
5,000
10,000
15,000
Airflow [m3/h]

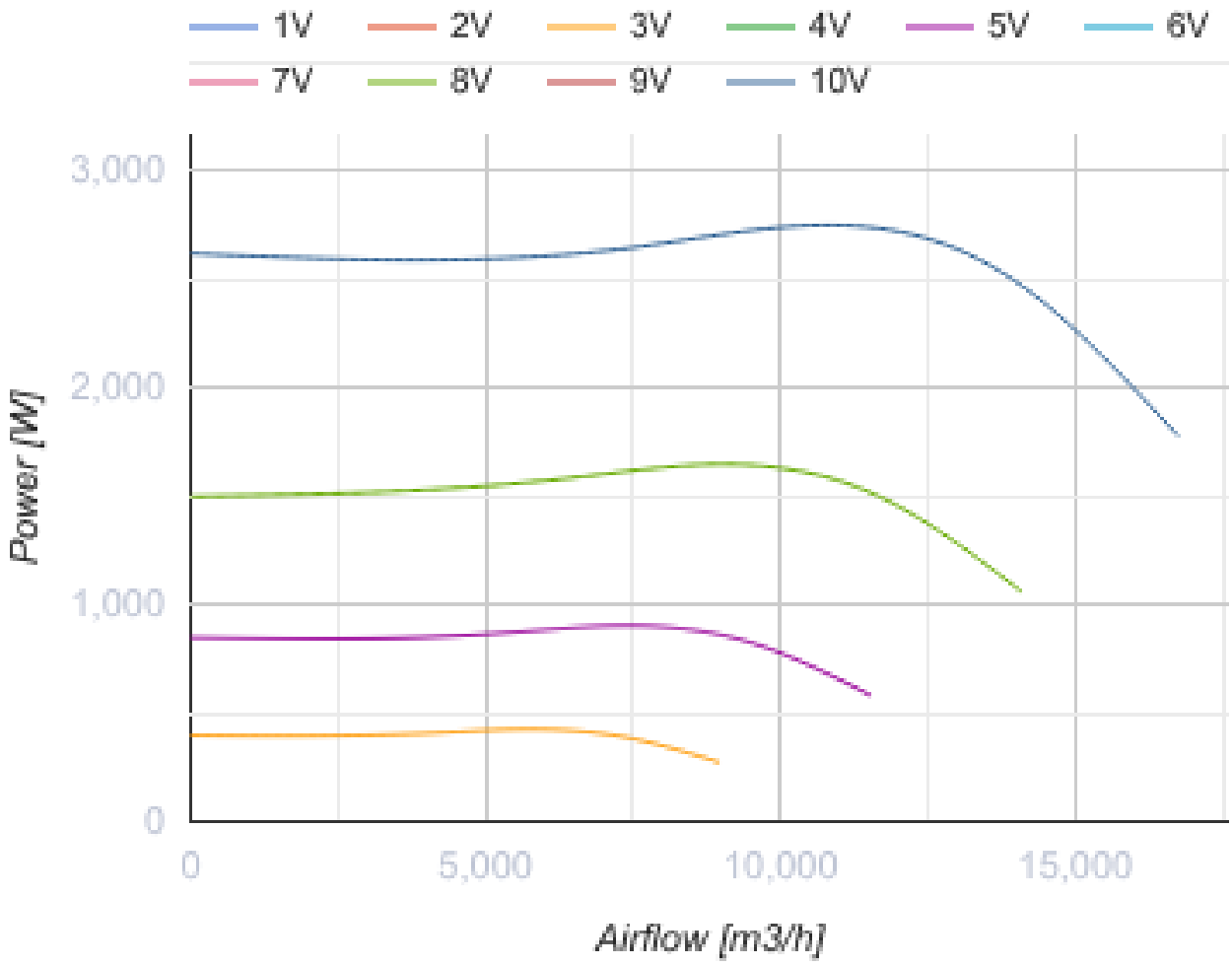

Dimensions

A
800

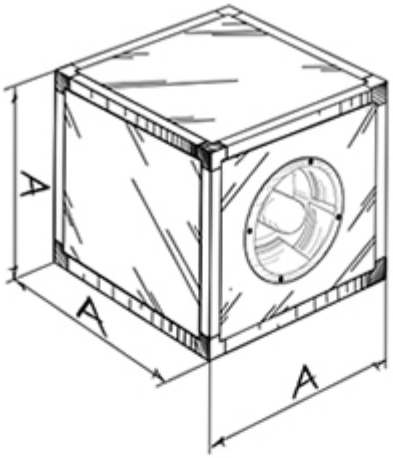

Iso-V EC

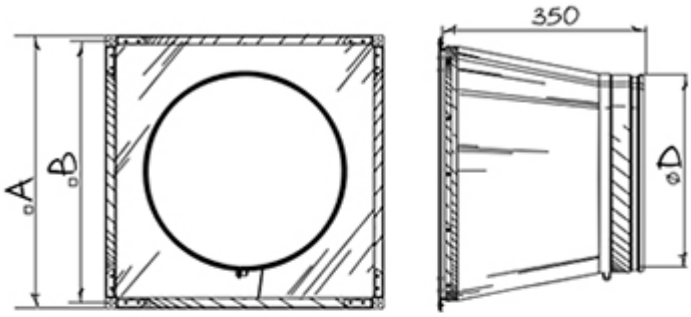

ARV

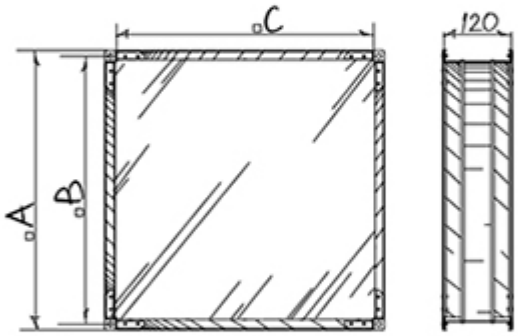

AKV

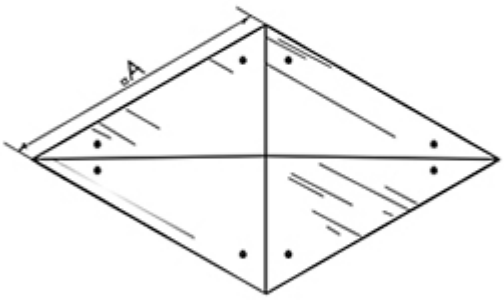

RSD-IV

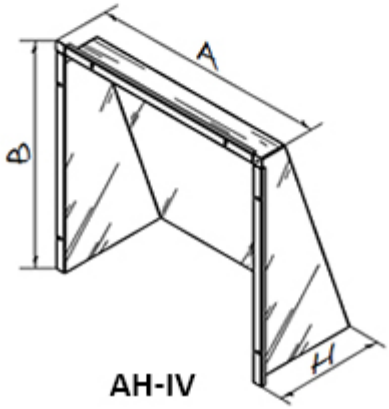

AH-IV

Ecodesign

Trademark	Blauberg
Model	Iso-V EC 630
Type of ventilation unit	Unidirectional
Type of drive installed	Integrated VSD
Type of heat recovery system	None
Nominal external pressure (Pa)	601
Maximum external leakage rates (%)	2.7
Static efficiency (%)	71.1
Declared typology	NRVU UVU
Effective electric power input (kW)	2.75
Sound power level (dB(A))	70

Accessories

EC motors regulators

Name	Photo	Description
CDT E/0-10		Speed control for EC motors