

Iso-V EC 315

Centrifugal inline fans in sound-insulated casings with EC-motors

- Sound-insulated casing
- Impeller type: Centrifugal impeller with backward curved blades
- Casing material: Galvanized steel
- Installation in any position

	Unit of measurement	Iso-V EC 315
Phases	-	1
Minimum supply voltage	V	200
Maximum supply voltage	V	240
Power supply frequency	Hz	50/60
Maximum airflow	m^3/h	2370
Weight	kg	25.7
Transported air temperature (max)	°C	80
Transported air temperature (min)	°C	-40
Ingress protection rating	-	IPX4
Impeller material	-	Plastic

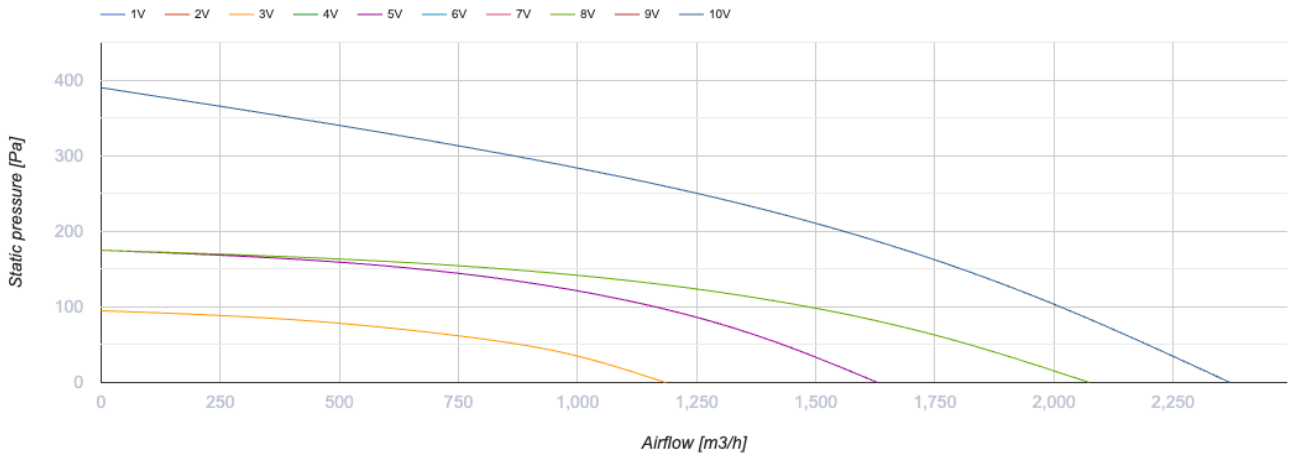

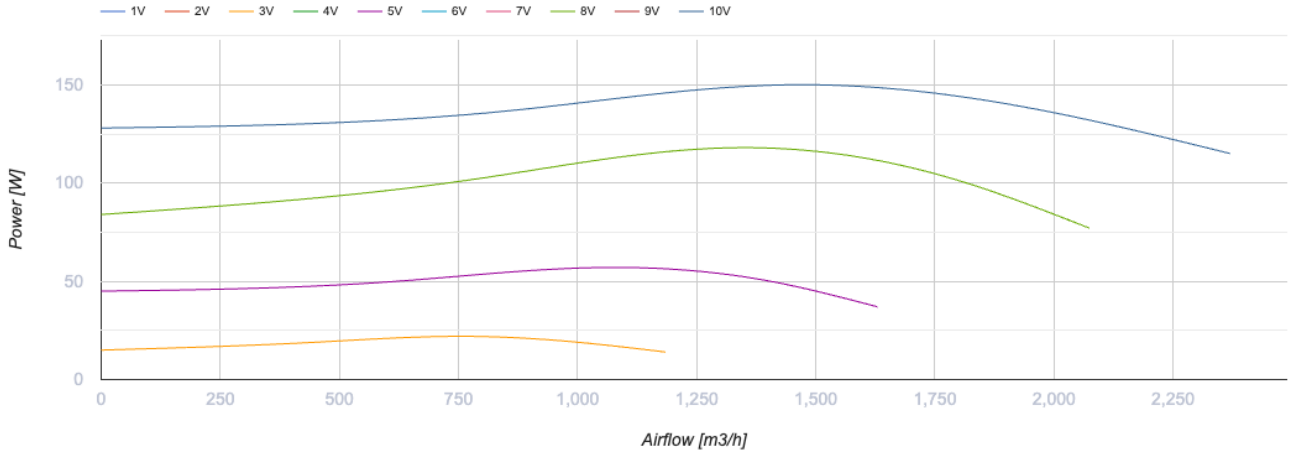

Dimensions

A
500

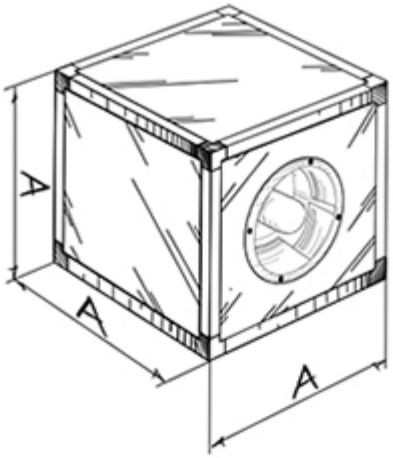

Iso-V EC

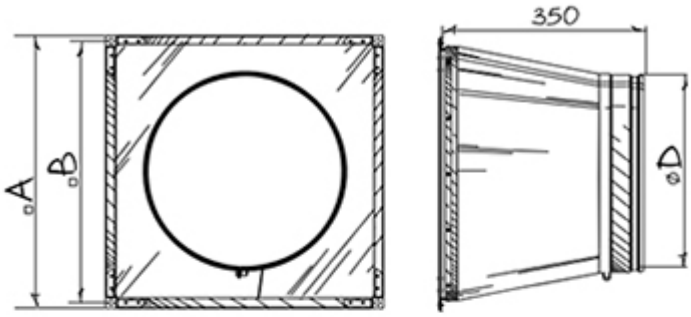

ARV

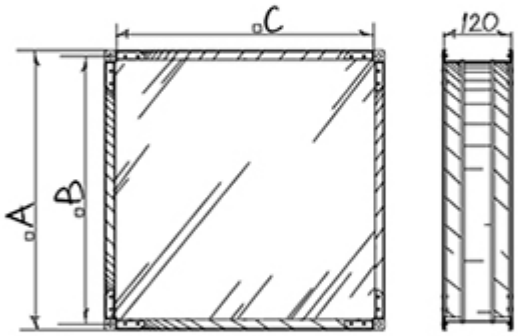

AKV

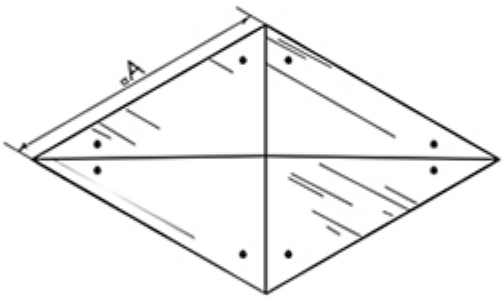

RSD-IV

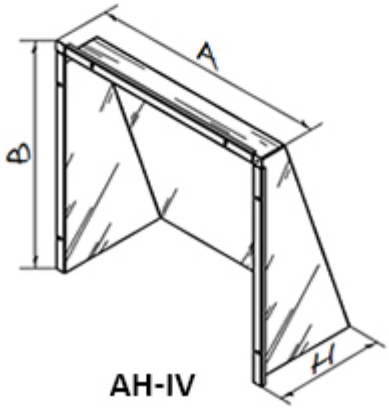

AH-IV

Ecodesign

Trademark	Blauberg
Model	Iso-V EC 315
Type of ventilation unit	Unidirectional
Type of drive installed	Integrated VSD
Type of heat recovery system	None
Nominal external pressure (Pa)	223
Maximum external leakage rates (%)	2.7
Static efficiency (%)	70.2
Declared typology	NRVU UVU
Effective electric power input (kW)	0.15
Sound power level (dB(A))	55

Accessories

EC motors regulators

Name	Photo	Description
CDT E/0-10		Speed control for EC motors