

Iso-V 560 6D

Centrifugal inline fans in sound-insulated casings

- Sound-insulated casing
- Impeller type: Centrifugal impeller with backward curved blades
- Casing material: Galvanized steel
- Installation in any position

	Unit of measurement	Iso-V 560 6D
Phases	-	3
Minimum supply voltage	V	400
Maximum supply voltage	V	400
Power supply frequency	Hz	50
Maximum airflow	m³/h	7970
Weight	kg	86
Transported air temperature (max)	°C	55
Transported air temperature (min)	°C	-40
Ingress protection rating	-	IPX4
Impeller material	-	Aluminium

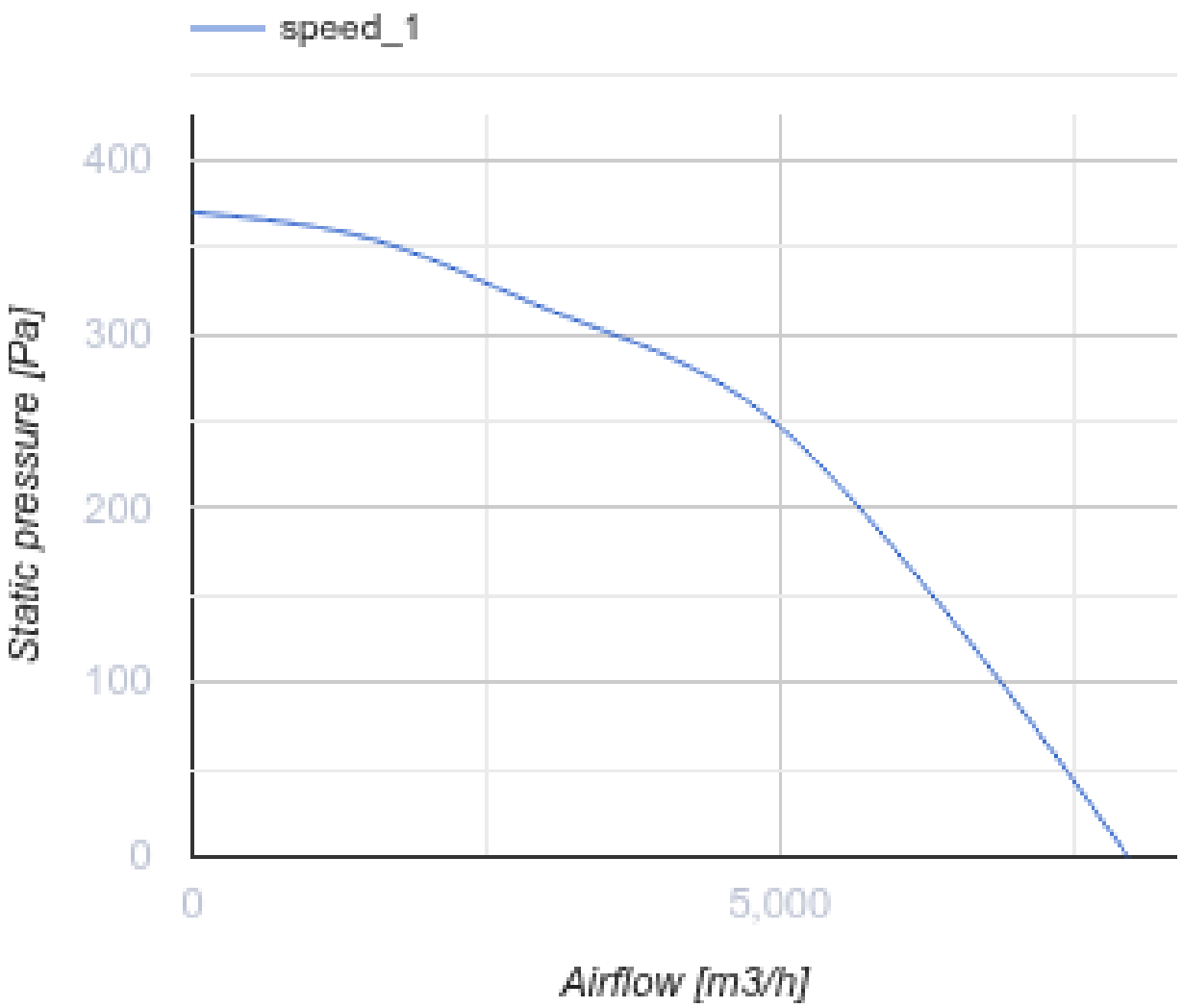
speed_1
400
300
200
100
0
Static pressure [Pa]
0
5,000
Airflow [m3/h]

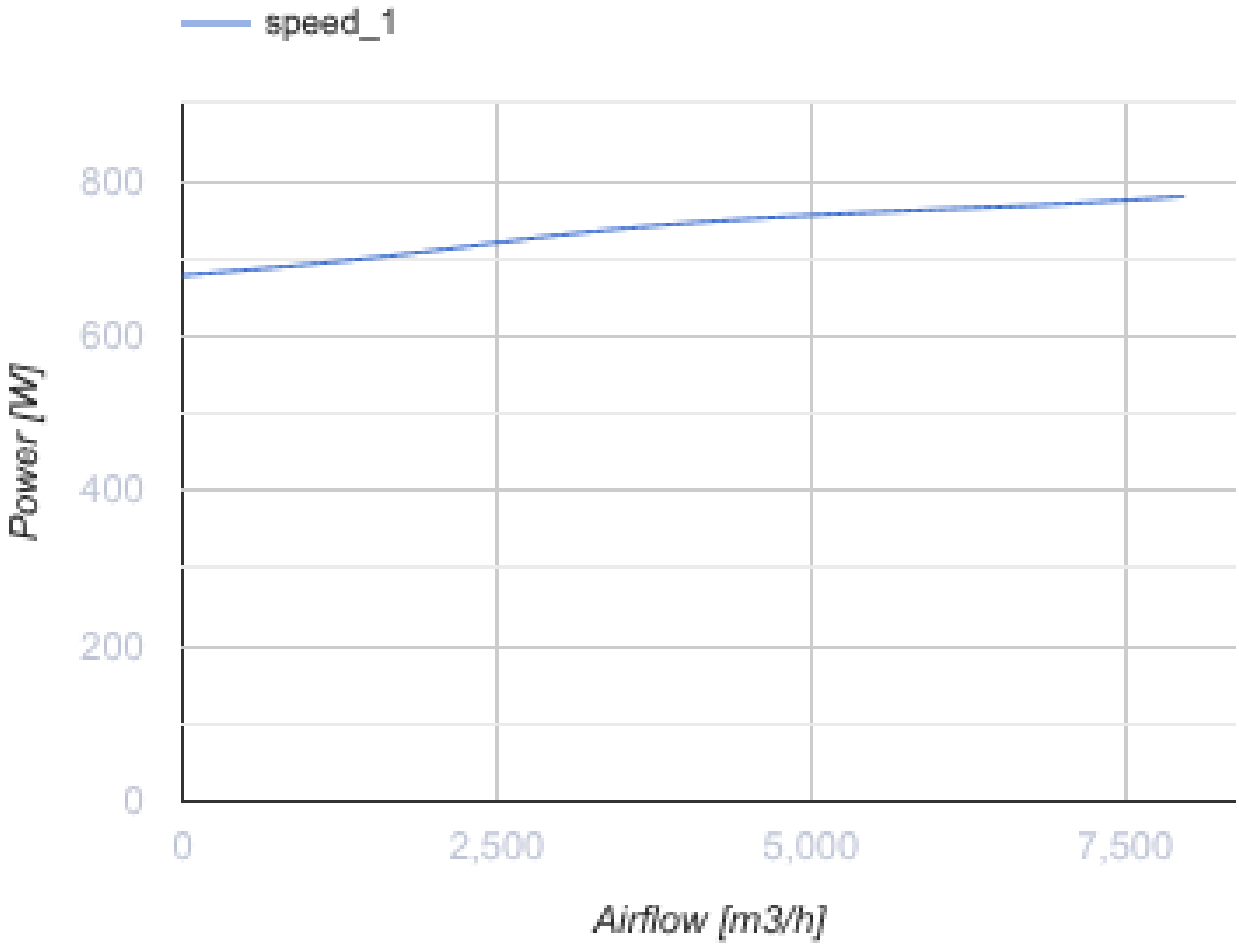

Dimensions

A
800

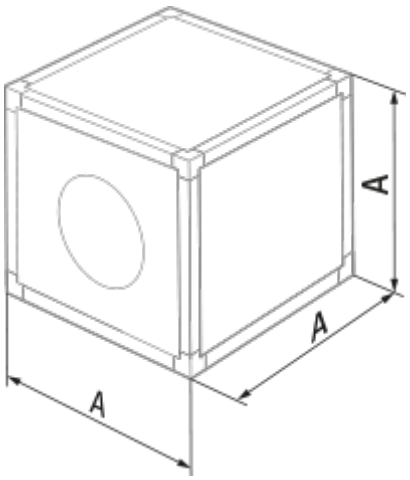

Ecodesign

Trademark	Blauberg
Model	Iso-V 560 6D
Type of ventilation unit	Unidirectional
Type of drive installed	External MSD or VSD
Type of heat recovery system	None
Nominal external pressure (Pa)	253
Maximum external leakage rates (%)	2.7
Static efficiency (%)	45
Declared typology	NRVU UVU
Effective electric power input (kW)	0.751
Sound power level (dB(A))	69

Accessories

Speed controllers

Name	Photo	Description
CDT E1.8		Thyristor speed controller