

# Iso-V 500 4E

Centrifugal inline fans in sound-insulated casings

- Sound-insulated casing
- Impeller type: Centrifugal impeller with backward curved blades
- Casing material: Galvanized steel
- Installation in any position

| | Unit of measurement | Iso-V 500 4E |
|---|---|---|
| Phases | - | 1 |
| Minimum supply voltage | V | 230 |
| Maximum supply voltage | V | 230 |
| Power supply frequency | Hz | 50 |
| Maximum airflow | m³/h | 7330 |
| Weight | kg | 52 |
| Transported air temperature (max) | °C | 50 |
| Transported air temperature (min) | °C | -20 |
| Ingress protection rating | - | IPX4 |
| Impeller material | - | Aluminium |

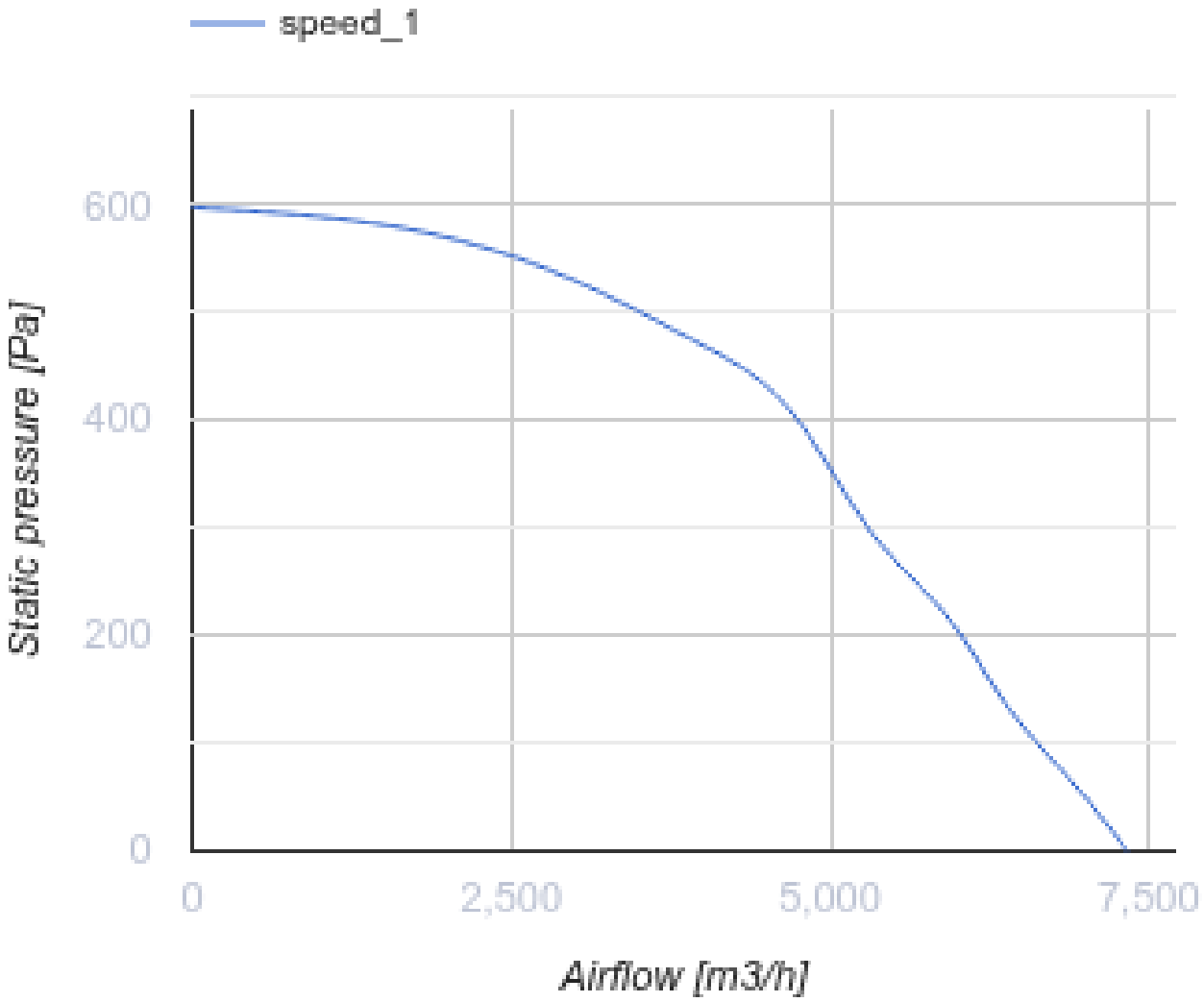
speed_1
600
400
200
0
Static pressure [Pa]
0
2,500
5,000
7,500
Airflow [m3/h]

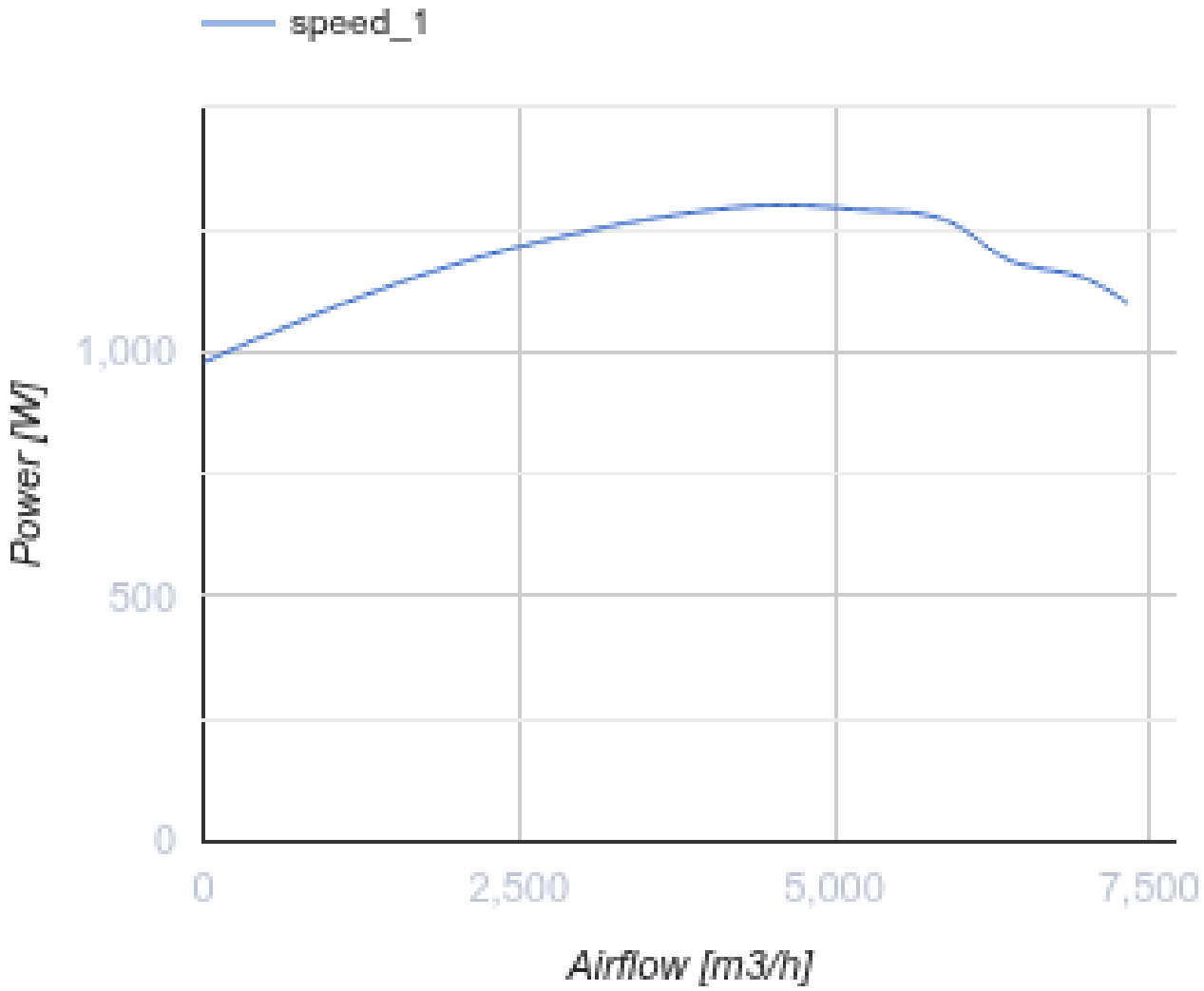


## Dimensions

| A |
|---|
| 670 |

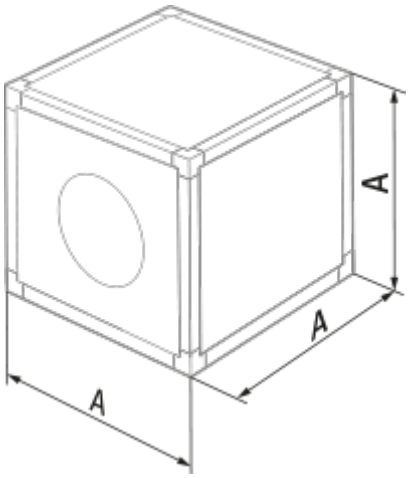
A
A
A

## Ecodesign

| | |
|---|---|
| Trademark | Blauberg |
| Model | Iso-V 500 4E |
| Type of ventilation unit | Unidirectional |
| Type of drive installed | External MSD or VSD |
| Type of heat recovery system | None |
| Nominal external pressure (Pa) | 425 |
| Maximum external leakage rates (%) | 2.7 |
| Static efficiency (%) | 40.8 |
| Declared typology | NRVU UVU |
| Effective electric power input (kW) | 1.289 |
| Sound power level (dB(A)) | 75 |

## Accessories

### Speed controllers

| Name | Photo | Description |
|---|---|---|
| CDT E1.8 |  | Thyristor speed controller |