

Iso-V 450 4E

Centrifugal inline fans in sound-insulated casings

- Sound-insulated casing
- Impeller type: Centrifugal impeller with backward curved blades
- Casing material: Galvanized steel
- Installation in any position

	Unit of measurement	Iso-V 450 4E
Phases	-	1
Minimum supply voltage	V	230
Maximum supply voltage	V	230
Power supply frequency	Hz	50
Maximum airflow	m³/h	5630
Weight	kg	43
Transported air temperature (max)	°C	70
Transported air temperature (min)	°C	-40
Ingress protection rating	-	IPX4
Impeller material	-	Aluminium

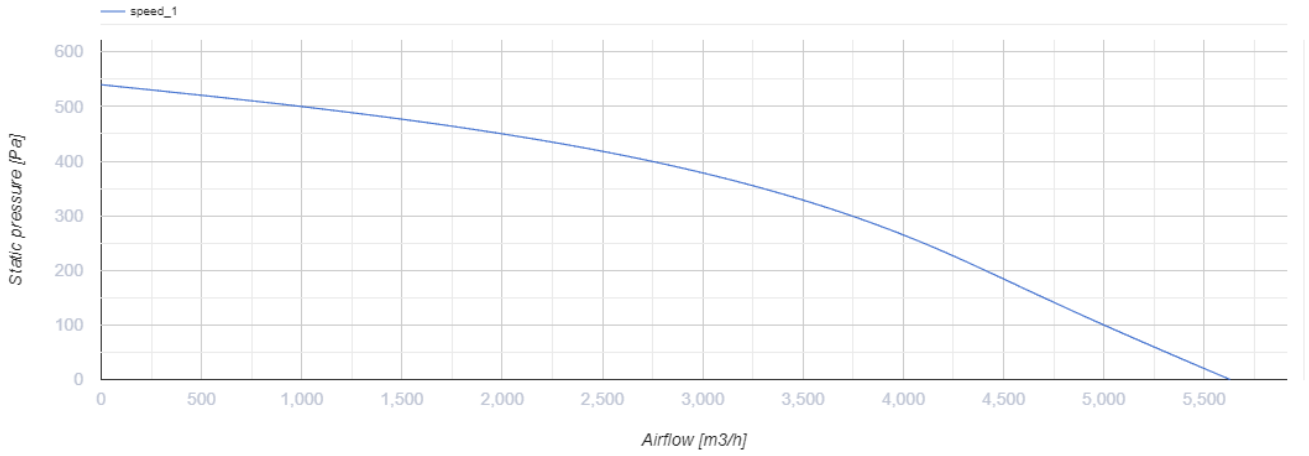

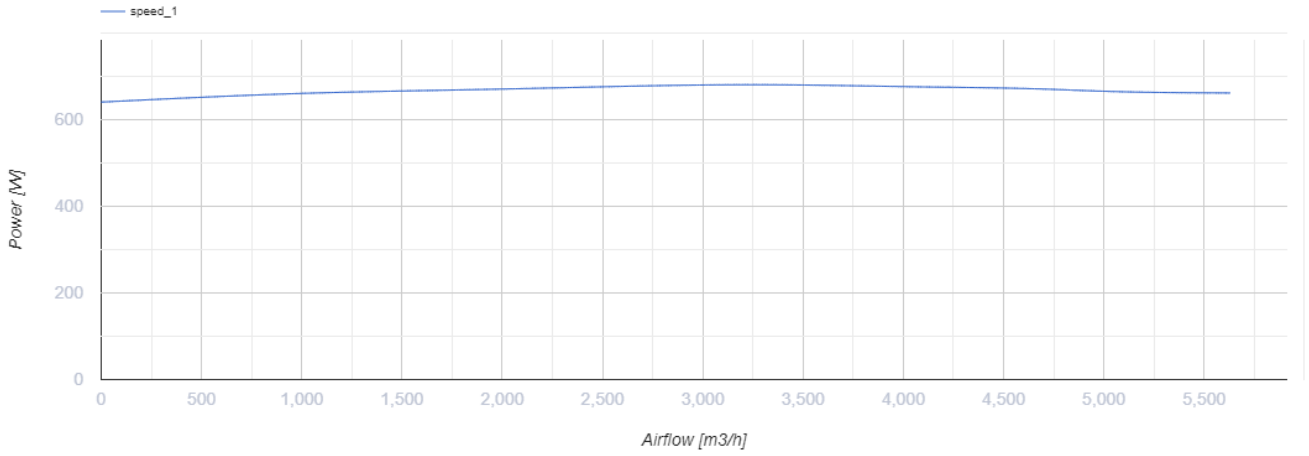

Dimensions

A
670

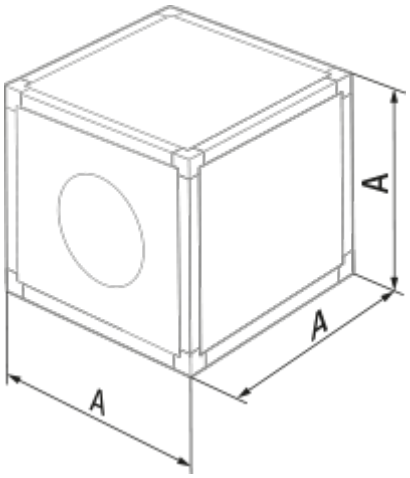

Ecodesign

Trademark	Blauberg
Model	Iso-V 450 4E
Type of ventilation unit	Unidirectional
Type of drive installed	External MSD or VSD
Type of heat recovery system	None
Nominal external pressure (Pa)	332
Maximum external leakage rates (%)	2.7
Static efficiency (%)	48.1
Declared typology	NRVU UVU
Effective electric power input (kW)	0.675
Sound power level (dB(A))	73

Accessories

Speed controllers

Name	Photo	Description
CDT E1.8		Thyristor speed controller