

Iso-V 400 4D

Centrifugal inline fans in sound-insulated casings

- Sound-insulated casing
- Impeller type: Centrifugal impeller with backward curved blades
- Casing material: Galvanized steel
- Installation in any position

	Unit of measurement	Iso-V 400 4D	
Phases	-	3	
Connection type	-	Δ	Y
Minimum supply voltage	V	400	
Maximum supply voltage	V	400	
Power supply frequency	Hz	50/60	
Maximum airflow	m³/h	3950	3340
Weight	kg	39	
Transported air temperature (max)	°C	60	
Transported air temperature (min)	°C	-40	
Ingress protection rating	-	IPX4	
Impeller material	-	Aluminium	

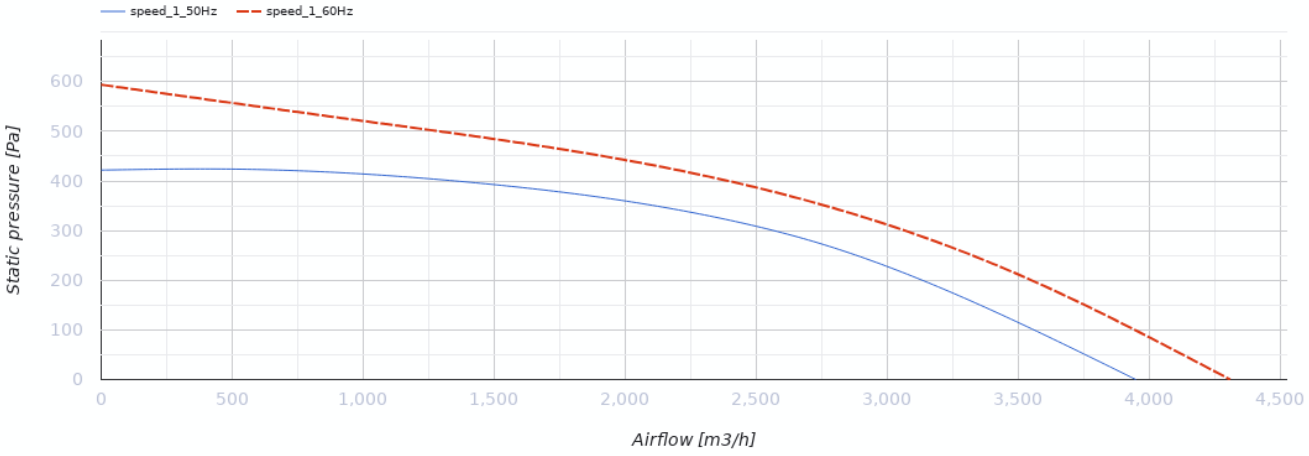

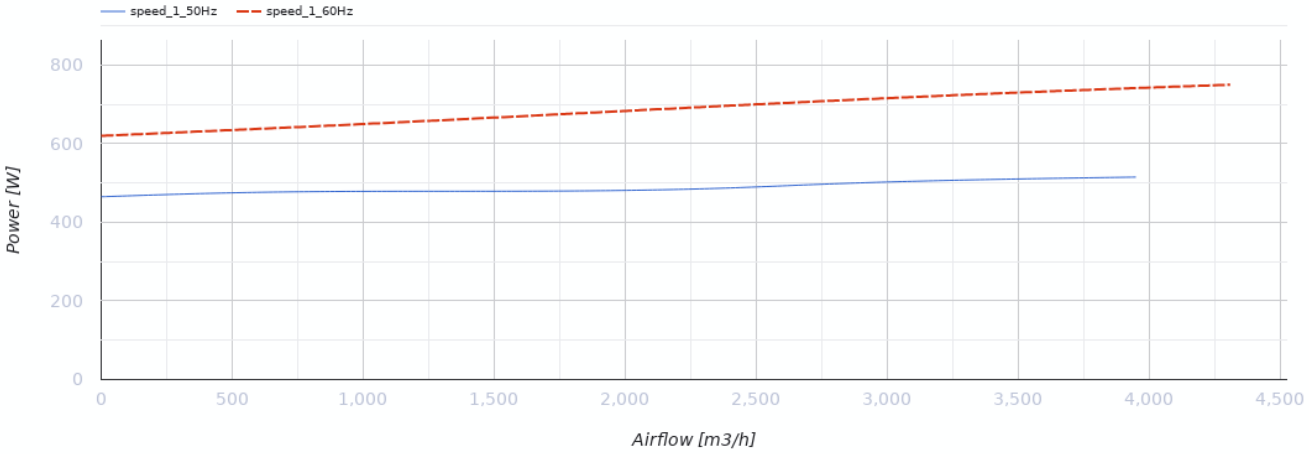

Dimensions

A
670

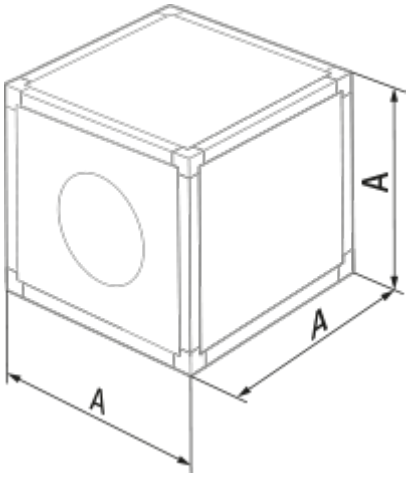

Accessories

Speed controllers

Name	Photo	Description
CDT E1.8		Thyristor speed controller