

Iso-V 355 4D

Centrifugal inline fans in sound-insulated casings

- Sound-insulated casing
- Impeller type: Centrifugal impeller with backward curved blades
- Casing material: Galvanized steel
- Installation in any position

	Unit of measurement	Iso-V 355 4D
Phases	-	3
Connection type	-	Y
Minimum supply voltage	V	400
Maximum supply voltage	V	400
Power supply frequency	Hz	50/60
Maximum airflow	m³/h	2660
Weight	kg	25
Transported air temperature (max)	°C	70
Transported air temperature (min)	°C	-25
Ingress protection rating	-	IPX4
Impeller material	-	Aluminium

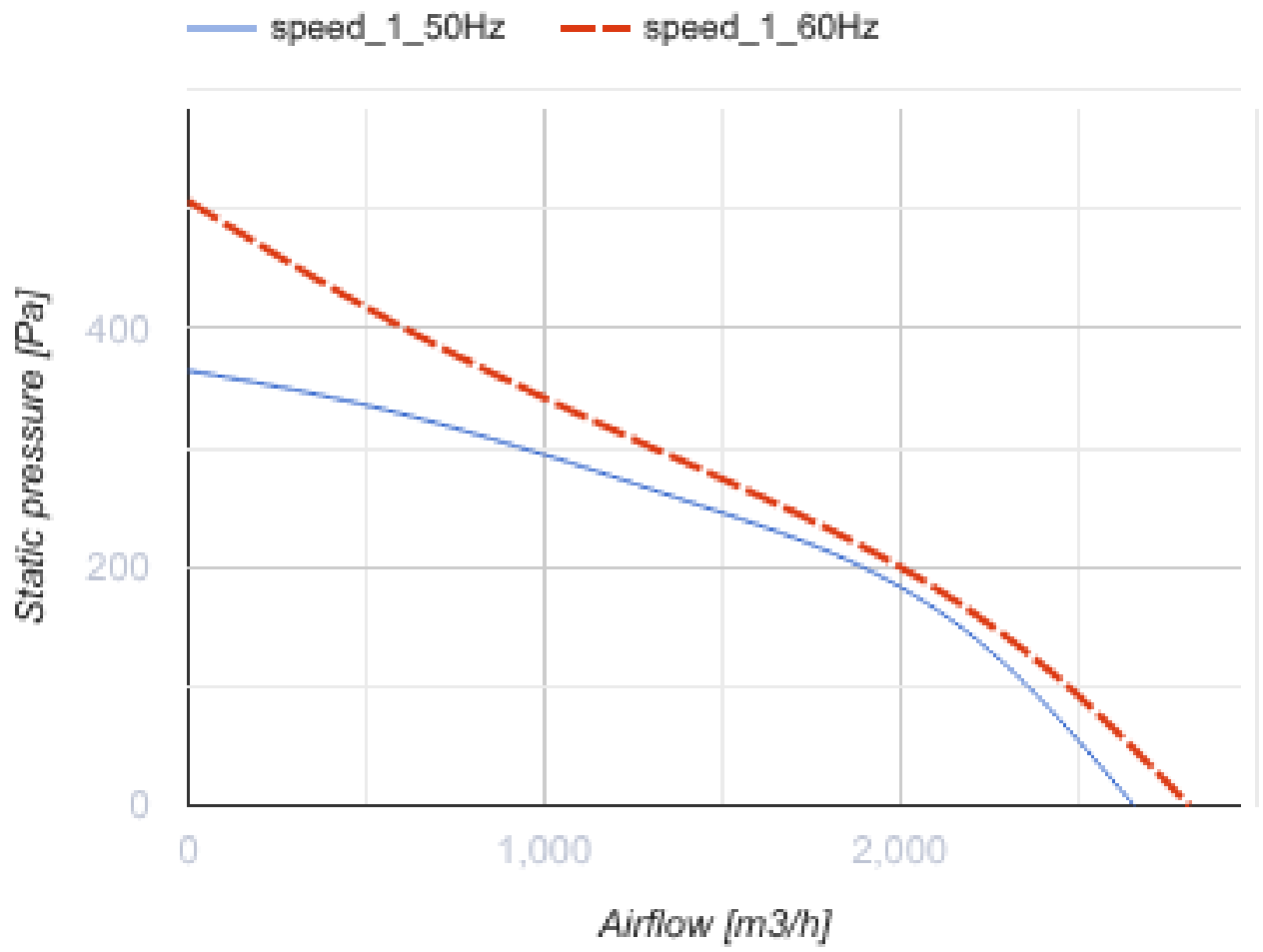
speed_1_50Hz
speed_1_60Hz
Static pressure [Pa]
400
200
0
0
1,000
2,000
Airflow [m3/h]

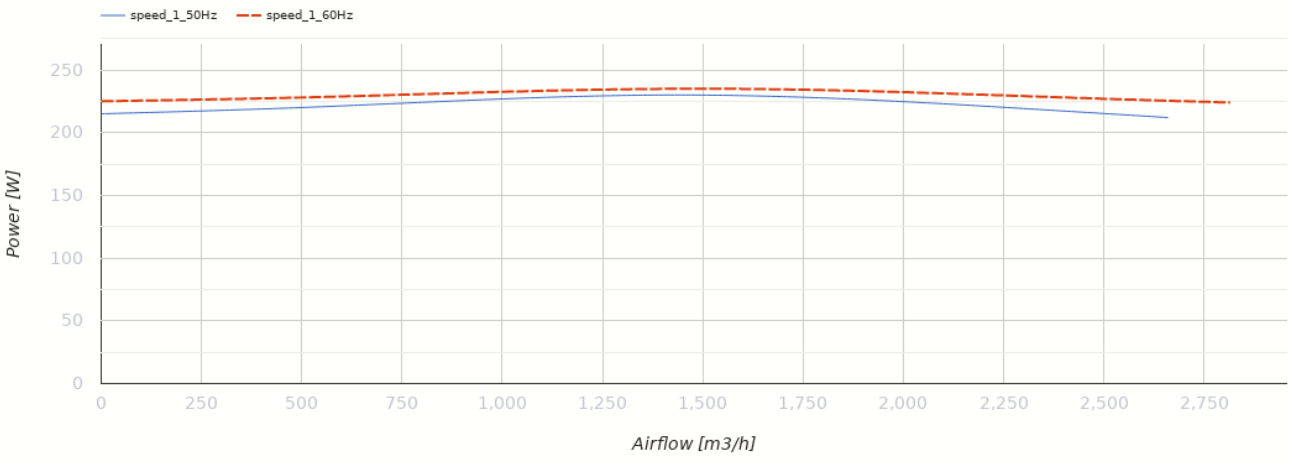
speed_1_50Hz
speed_1_60Hz
Power [W]
250
200
150
100
50
0
0
250
500
750
1,000
1,250
1,500
1,750
2,000
2,250
2,500
2,750
Airflow [m3/h]

Dimensions

A
500

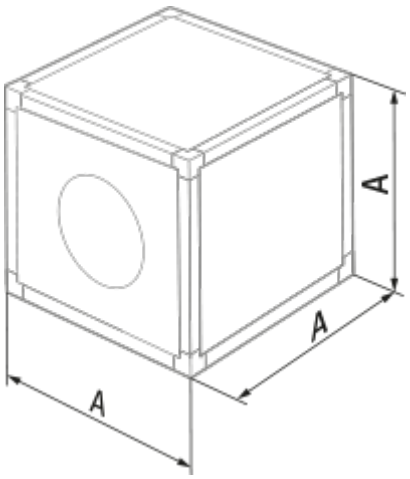

Ecodesign

Trademark	Blauberg
Model	Iso-V 355 4D
Type of ventilation unit	Unidirectional
Type of drive installed	External MSD or VSD
Type of heat recovery system	None
Nominal external pressure (Pa)	251
Maximum external leakage rates (%)	2.7
Static efficiency (%)	44.7
Declared typology	NRVU UVU
Effective electric power input (kW)	0.23
Sound power level (dB(A))	73

Accessories

Speed controllers

Name	Photo	Description
CDT E1.8		Thyristor speed controller