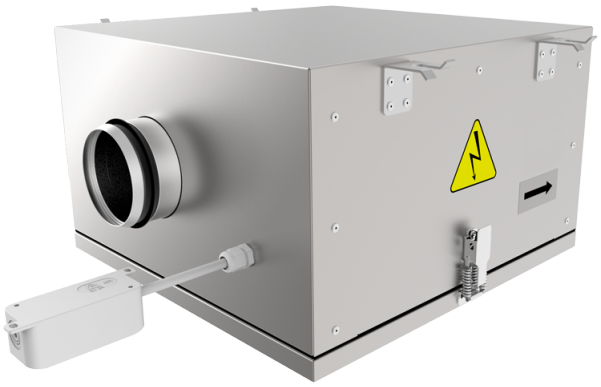

ISO-RF EC 250

Centrifugal inline fans with forward curved blades in casings with improved sound insulation properties with EC-motors

- Sound-insulated casing
- Impeller type: Centrifugal impeller with forward curved blades
- Casing material: Galvanized steel
- Installation in any position

	Unit of measurement	ISO-RF EC 250
Phases	-	1
Minimum supply voltage	V	230
Maximum supply voltage	V	230
Power supply frequency	Hz	50/60
Maximum airflow	m³/h	1682
Weight	kg	33
Transported air temperature (max)	°C	50
Transported air temperature (min)	°C	-25
Ingress protection rating	-	IP44
Ingress protection rating of the drive	-	IP54
Impeller material	-	Galvanized steel

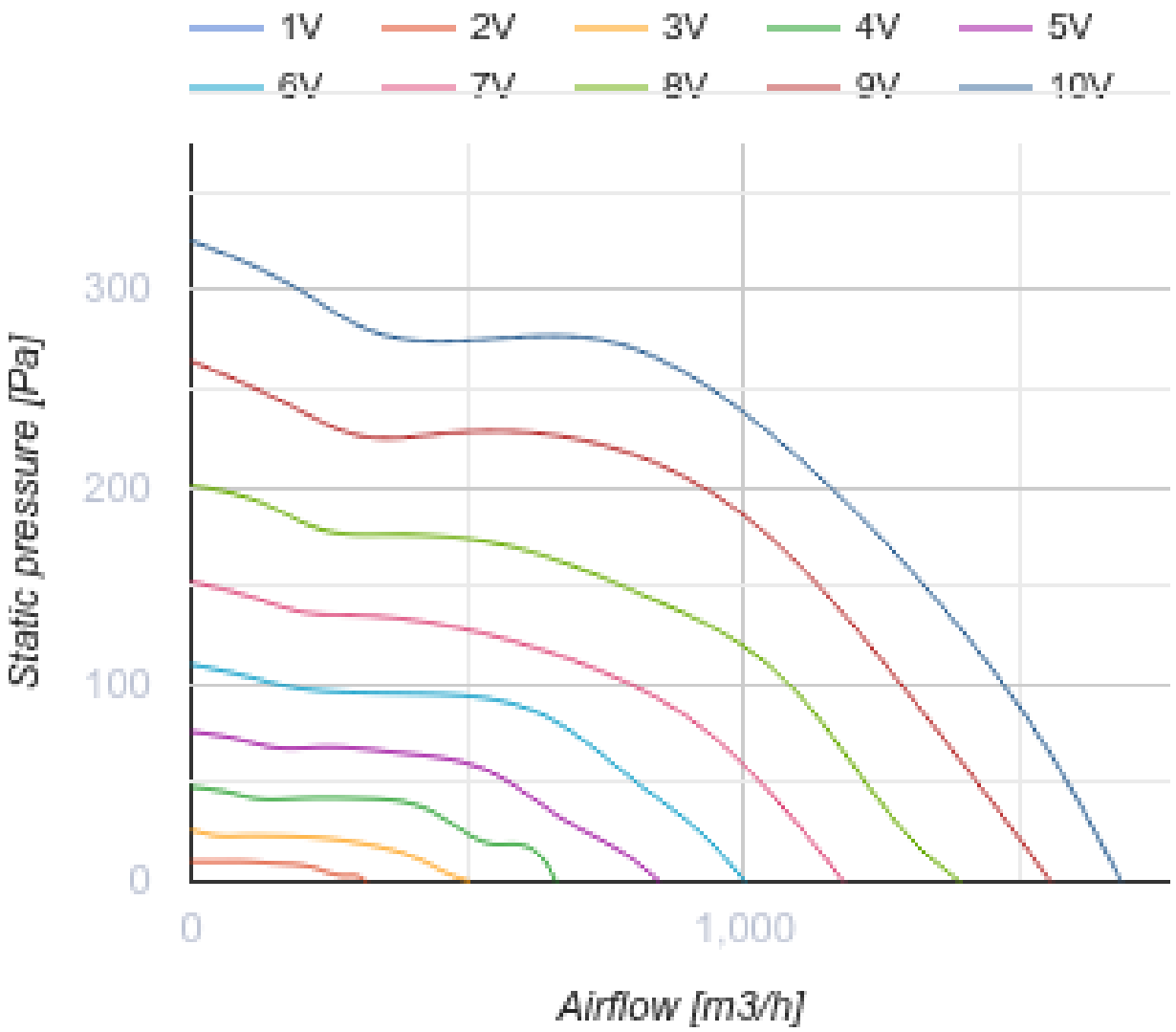
1V
2V
3V
4V
5V
6V
7V
8V
9V
10V
300
200
100
0
Static pressure [Pa]
0
1,000
Airflow [m3/h]

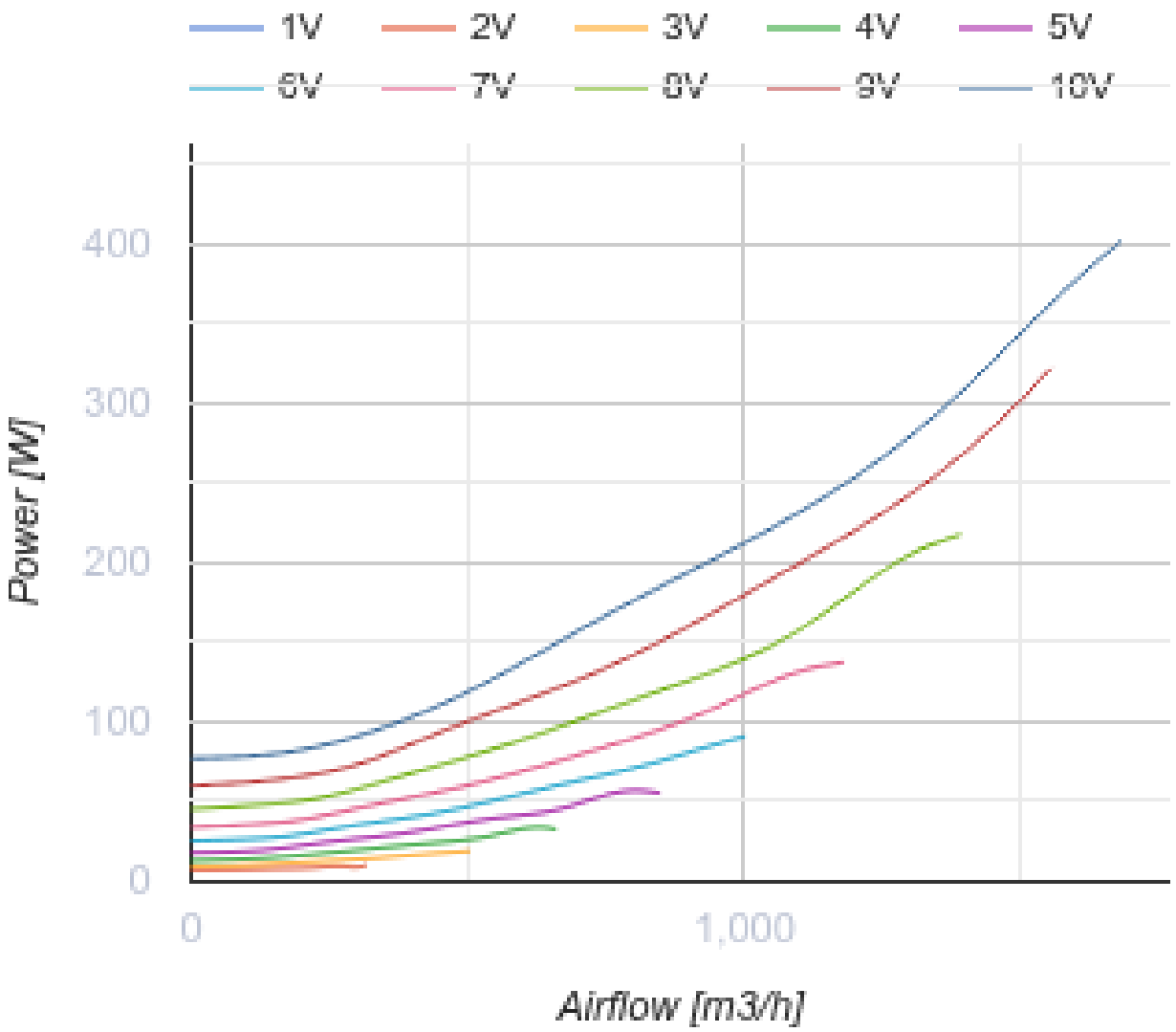

Dimensions

ØD	B	B1	B2	H	L	L1	L2
247	665	487	742	405	650	699	606

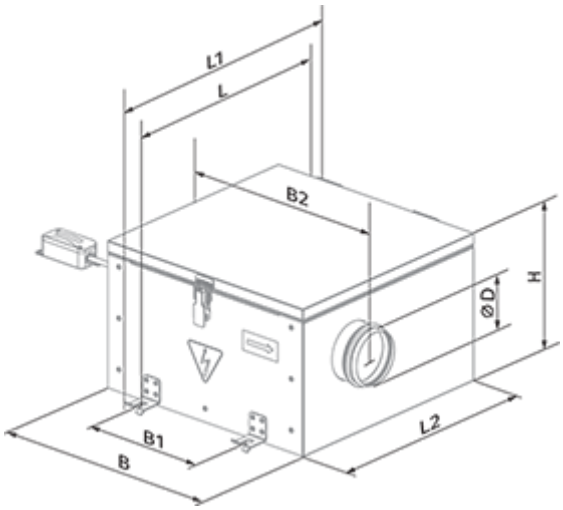
L1
L
B2
ØD
H
B1
B
L2

Ecodesign

Trademark	Blauberg					
Model	ISO-RF EC 250					
Specific energy consumption (SEC) (kWh/(m²/a))	Cold		Average		Warm	
	-32	B	-15	E	-6	F
Type of ventilation unit	Unidirectional					
Type of drive installed	Multi-speed					
Type of heat recovery system	None					
Maximum flow rate (m³/h)	185					
Electric power input (W)	17					
Reference flow rate (m³/s)	0.036					
Nominal external pressure (Pa)	274					
Specific power input (SPI) (W/(m³/h))	0.059					
Control typology	Manual control					
Maximum external leakage rates (%)	2.7					
Static efficiency (%)	39.8					
Declared typology	NRVU UVU					
Effective electric power input (kW)	0.168					
Sound power level (dB(A))	61					
The annual electricity consumption (AEC) (kWh/a)	Cold		Average		Warm	
	100		100		100	
The annual heating saved (AHS) (kWh/a)	Cold		Average		Warm	
	3400		1700		800	

Accessories

EC motors regulators

Name	Photo	Description
CDT E/0-10		Speed control for EC motors

Humidity sensors

Name	Photo	Description

HSE / HSI 1.5		Sensors
TE / TI 1.5		Timers
LSE / LSI 1.5		Sensors
IRSE / IRSI 1.5		Sensors