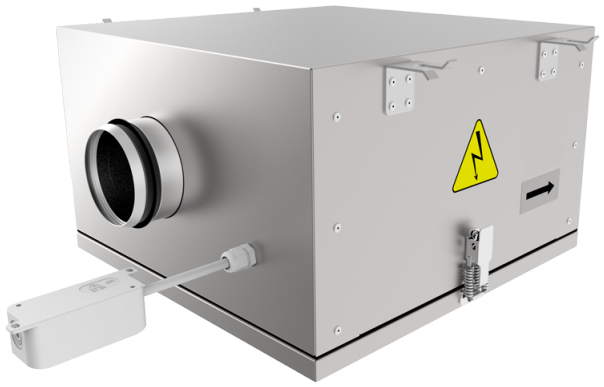

ISO-RF EC 160

Centrifugal inline fans with forward curved blades in casings with improved sound insulation properties with EC-motors

- Sound-insulated casing
- Impeller type: Centrifugal impeller with forward curved blades
- Casing material: Galvanized steel
- Installation in any position

	Unit of measurement	ISO-RF EC 160
Phases	-	1
Minimum supply voltage	V	230
Maximum supply voltage	V	230
Power supply frequency	Hz	50/60
Maximum airflow	m³/h	779
Weight	kg	24
Transported air temperature (max)	°C	50
Transported air temperature (min)	°C	-25
Ingress protection rating	-	IP44
Ingress protection rating of the drive	-	IP54
Impeller material	-	Galvanized steel

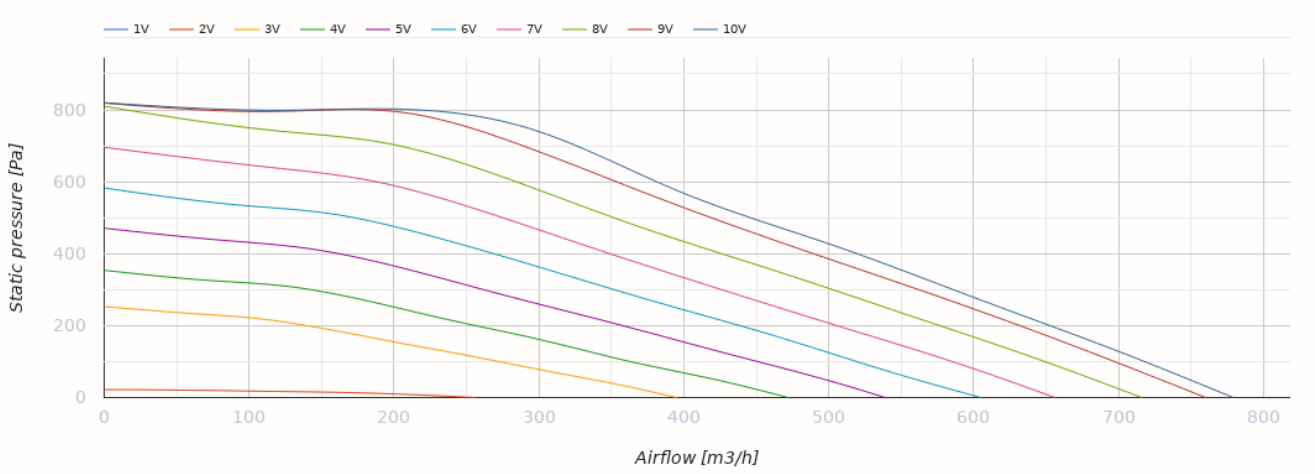

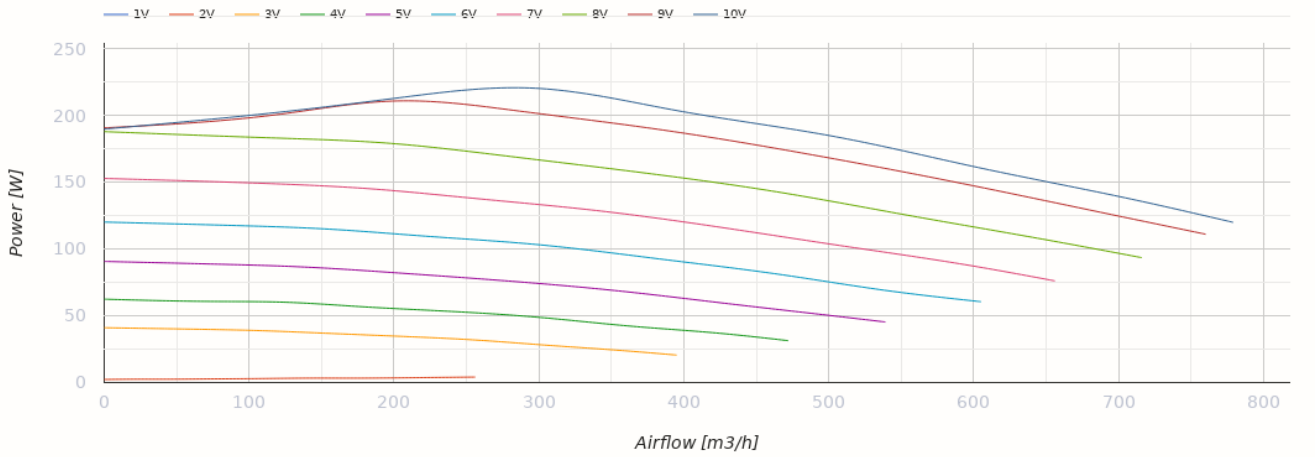

Dimensions

ØD	B	B1	B2	H	L	L1	L2
157	592	390	669	350	564	613	520

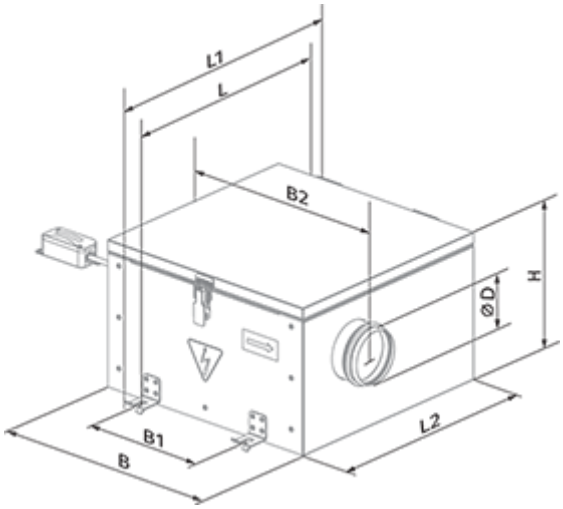

Ecodesign

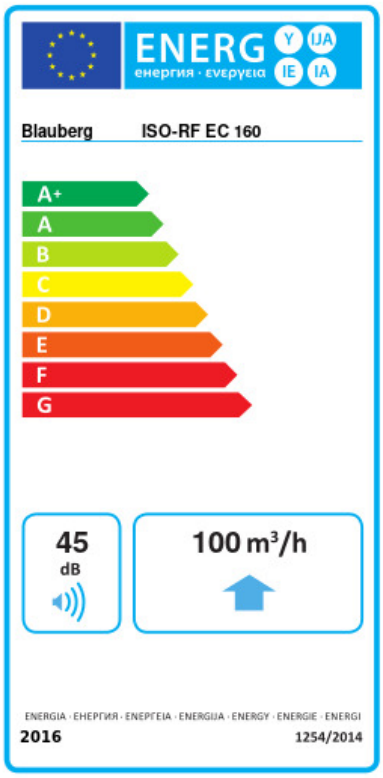

Trademark	Blauberg					
Model	ISO-RF EC 160					
Specific energy consumption (SEC) (kWh/(m²/a))	Cold		Average		Warm	
	-54	A+, A	-27	E, B	-11.5	F, E
Type of ventilation unit	Unidirectional					
Type of drive installed	Multi-speed					
Type of heat recovery system	None					
Maximum flow rate (m³/h)	710					
Electric power input (W)	139					
Reference flow rate (m³/s)	0.138					
Reference pressure difference (Pa)	50					
Specific power input (SPI) (W/(m³/h))	0.1					
Control typology	Clock control					
Maximum external leakage rates (%)	2.7					
Declared typology	RVU UVU					
Sound power level (dB(A))	58					
The annual electricity consumption (AEC) (kWh/a)	Cold		Average		Warm	
	53		53		53	
The annual heating saved (AHS) (kWh/a)	Cold		Average		Warm	
	5536		2830		1280	

Accessories

EC motors regulators

Name	Photo	Description
CDT E/0-10		Speed control for EC motors

Humidity sensors

Name	Photo	Description
HSE / HSI 1.5		Sensors

TE / TI 1.5		Timers
LSE / LSI 1.5		Sensors
IRSE / IRSI 1.5		Sensors