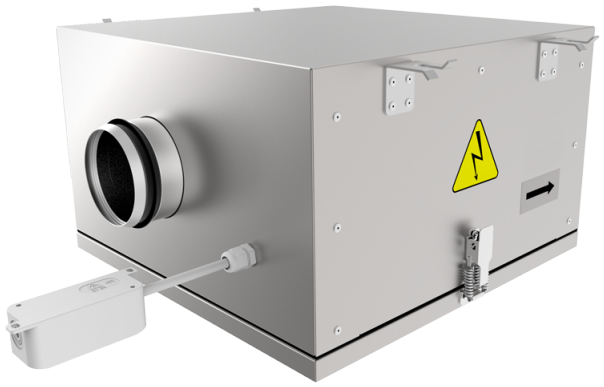

Iso-RB EC 500

Centrifugal inline fans with backward curved blades in cases with improved sound insulation properties with EC-motors

- Sound-insulated casing
- Impeller type: Centrifugal impeller with backward curved blades
- Casing material: Galvanized steel
- Installation in any position

	Unit of measurement	Iso-RB EC 500
Phases	-	1
Minimum supply voltage	V	230
Maximum supply voltage	V	230
Power supply frequency	Hz	50/60
Maximum airflow	m³/h	7145
Weight	kg	86
Transported air temperature (max)	°C	55
Transported air temperature (min)	°C	-25
Ingress protection rating	-	IPX4
Ingress protection rating of the drive	-	IP54
Impeller material	-	Plastic

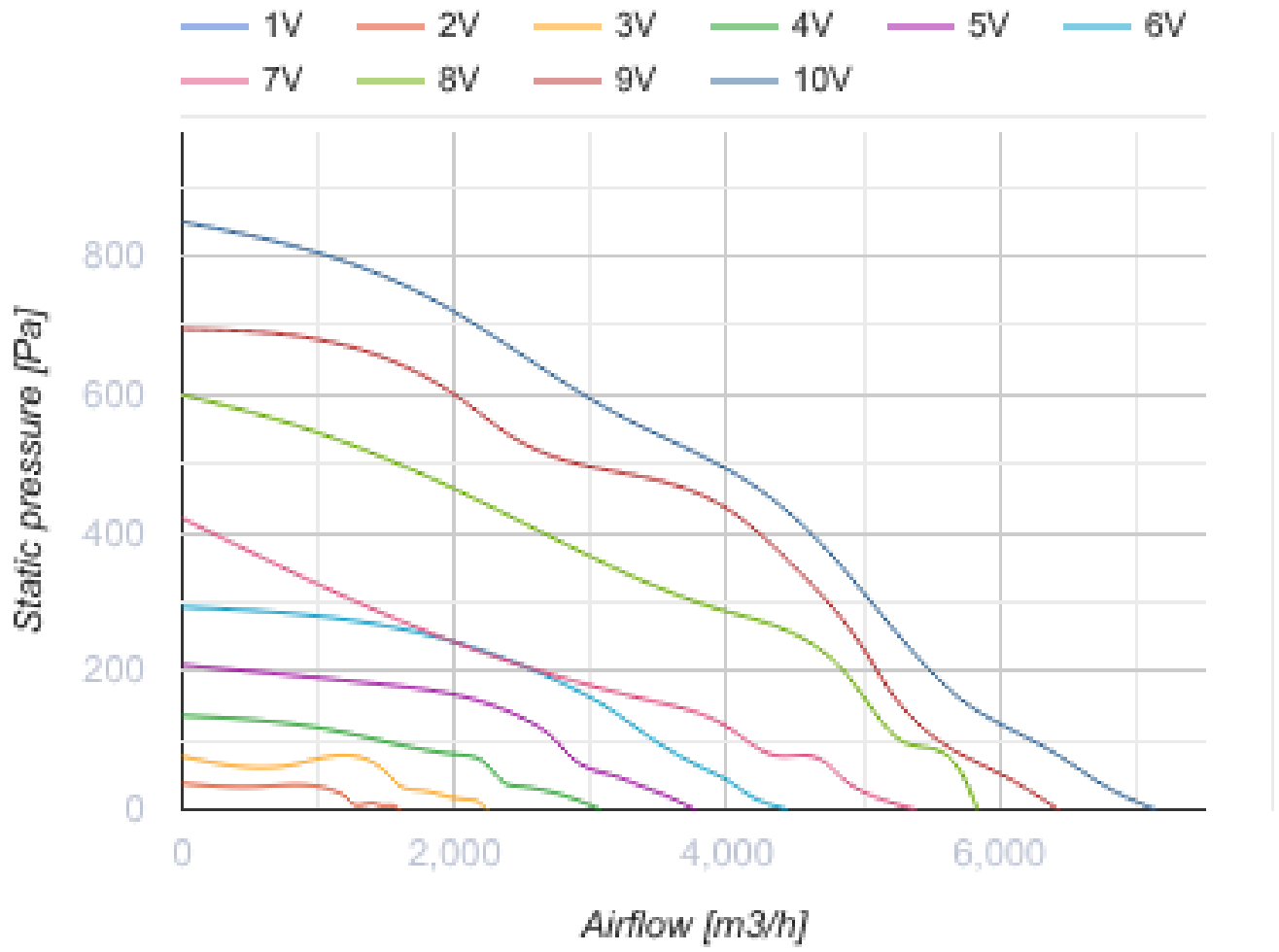
1V
2V
3V
4V
5V
6V
7V
8V
9V
10V
Static pressure [Pa]
800
600
400
200
0
0
2,000
4,000
6,000
Airflow [m3/h]

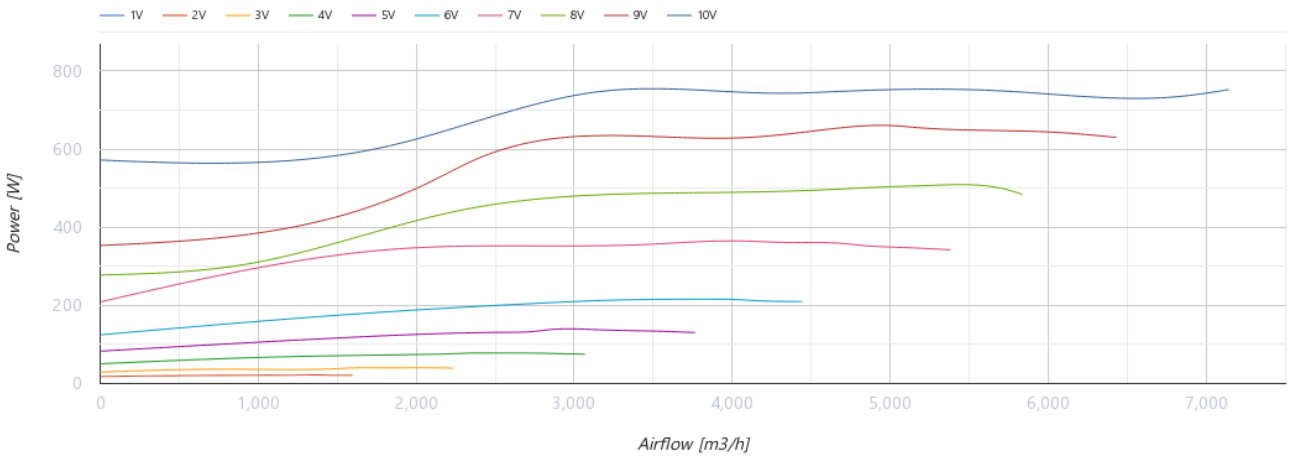
1V
2V
3V
4V
5V
6V
7V
8V
9V
10V
Power [W]
800
600
400
200
0
0
1,000
2,000
3,000
4,000
5,000
6,000
7,000
Airflow [m3/h]

Dimensions

Ø D	B	B1	B2	H	L1	L2
499	1049	800	1146	660	1079	998

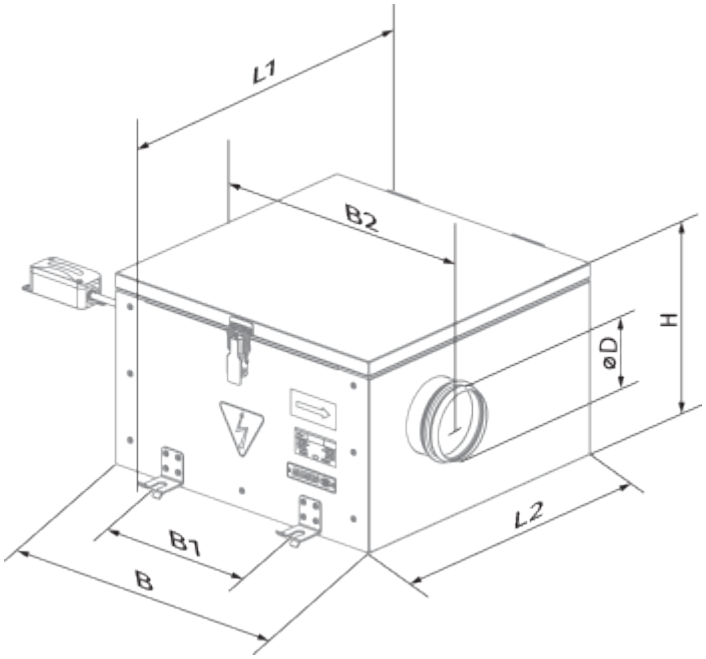

Ecodesign

Trademark	Blauberg
Model	Iso-RB EC 500
Type of ventilation unit	Unidirectional
Type of drive installed	Integrated VSD
Type of heat recovery system	None
Nominal external pressure (Pa)	450
Maximum external leakage rates (%)	2.7
Static efficiency (%)	74.2
Declared typology	NRVU UVU
Effective electric power input (kW)	0.743
Sound power level (dB(A))	76

Accessories

EC motors regulators

Name	Photo	Description
CDT E/0-10		Speed control for EC motors