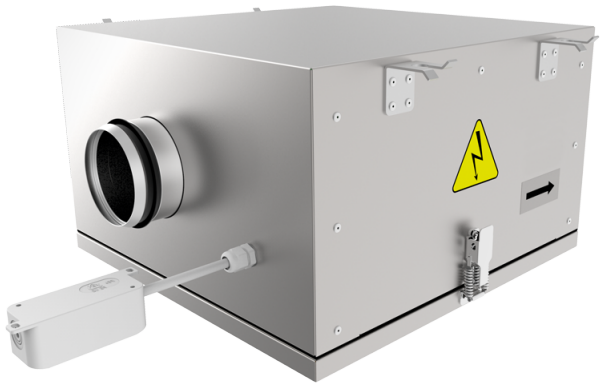

Iso-RB EC 450

Centrifugal inline fans with backward curved blades in cases with improved sound insulation properties with EC-motors

- Sound-insulated casing
- Impeller type: Centrifugal impeller with backward curved blades
- Casing material: Galvanized steel
- Installation in any position

	Unit of measurement	Iso-RB EC 450
Phases	-	3
Minimum supply voltage	V	400
Maximum supply voltage	V	400
Power supply frequency	Hz	50/60
Maximum airflow	m^3/h	5620
Weight	kg	60
Transported air temperature (max)	°C	55
Transported air temperature (min)	°C	-25
Ingress protection rating	-	IPX4
Ingress protection rating of the drive	-	IP54
Impeller material	-	Plastic

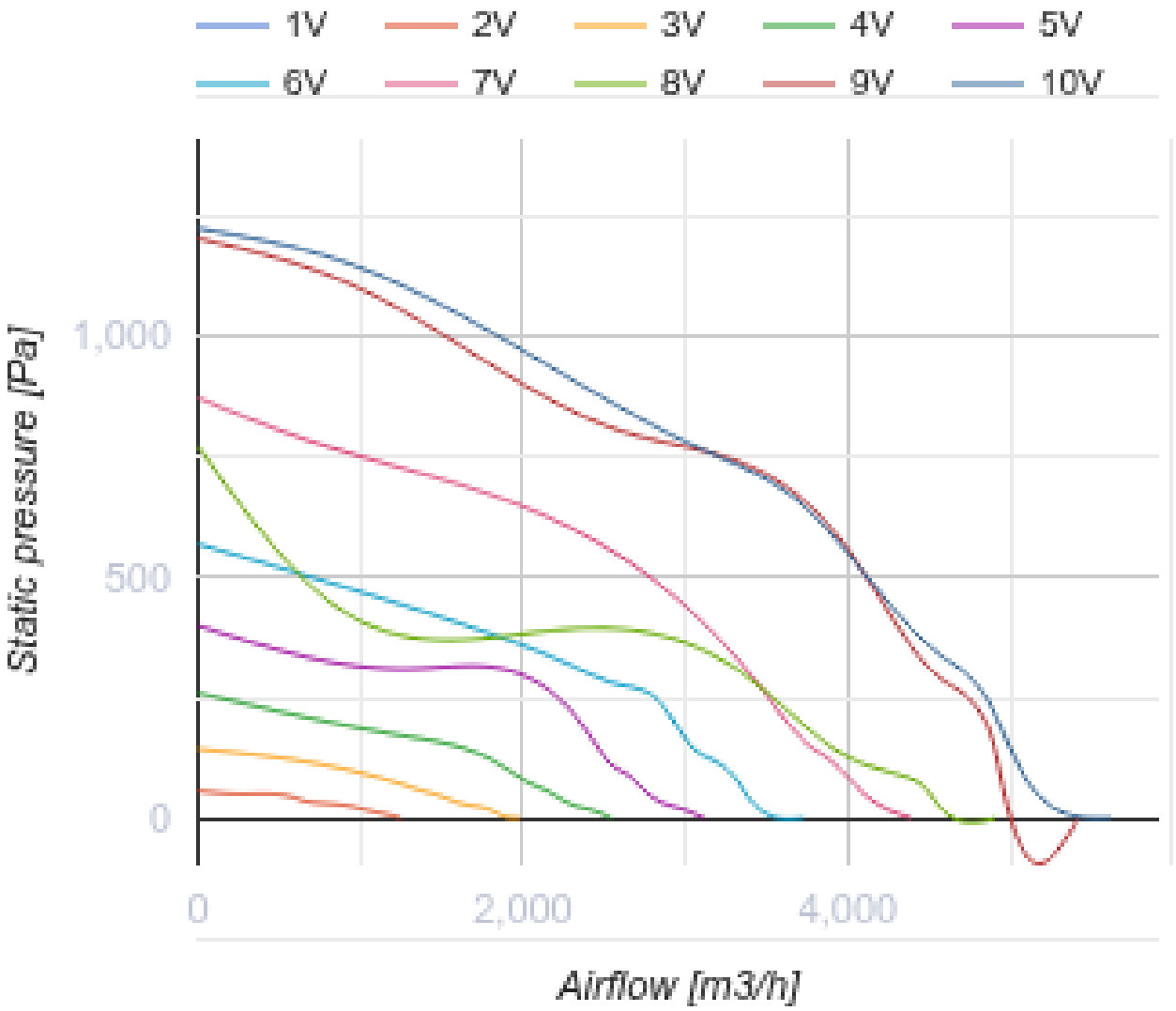
1V
2V
3V
4V
5V
6V
7V
8V
9V
10V
Static pressure [Pa]
1,000
500
0
0
2,000
4,000
Airflow [m3/h]

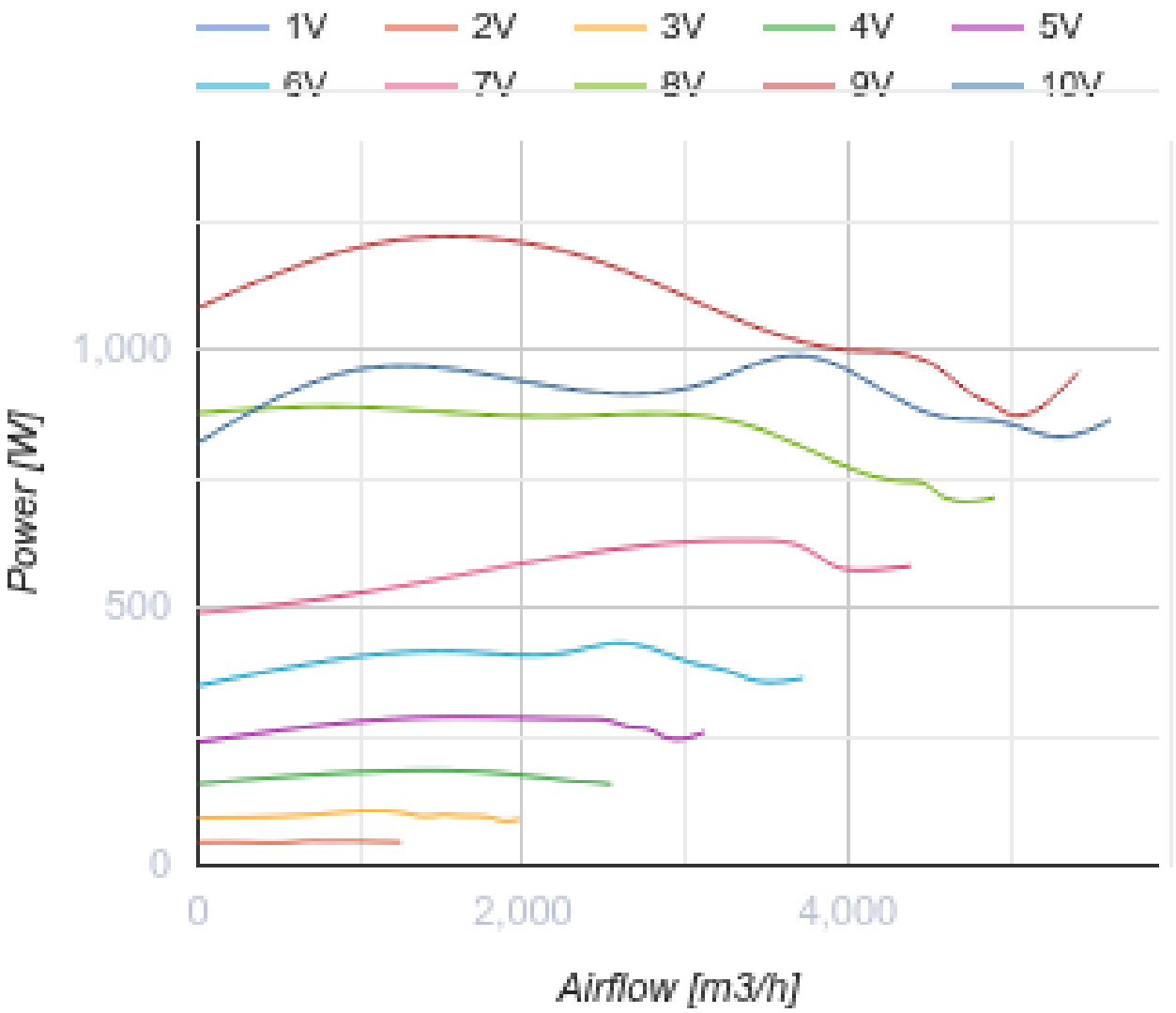

Dimensions

Ø D	B	B1	B2	H	L1	L2
449	885	670	982	580	886	805

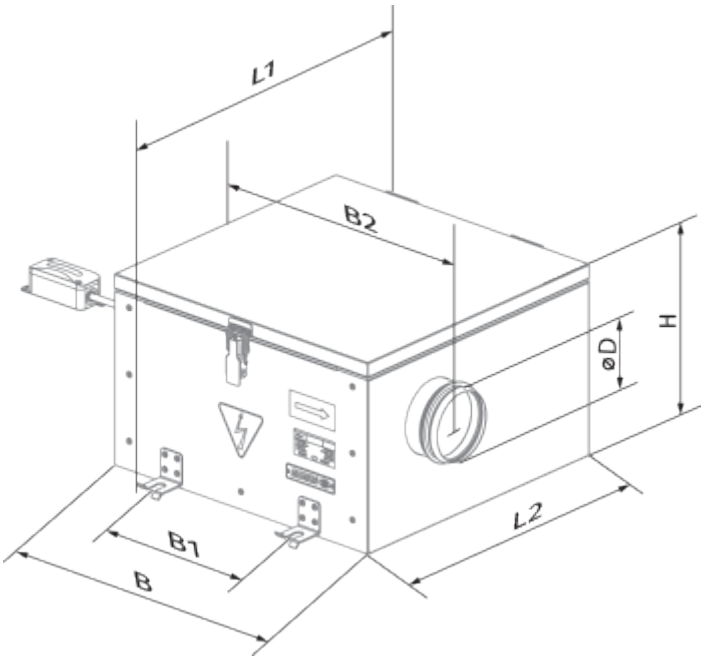
L1
B2
H
ØD
L2
B1
B

Ecodesign

Trademark	Blauberg
Model	Iso-RB EC 450
Type of ventilation unit	Unidirectional
Type of drive installed	Integrated VSD
Type of heat recovery system	None
Nominal external pressure (Pa)	762
Maximum external leakage rates (%)	2.7
Static efficiency (%)	72.2
Declared typology	NRVU UVU
Effective electric power input (kW)	0.937
Sound power level (dB(A))	74

Accessories

For round ducts

Name	Photo	Description
VKA 450		Air dampers for round ducts

EC motors regulators

Name	Photo	Description
CDT E/0-10		Speed control for EC motors