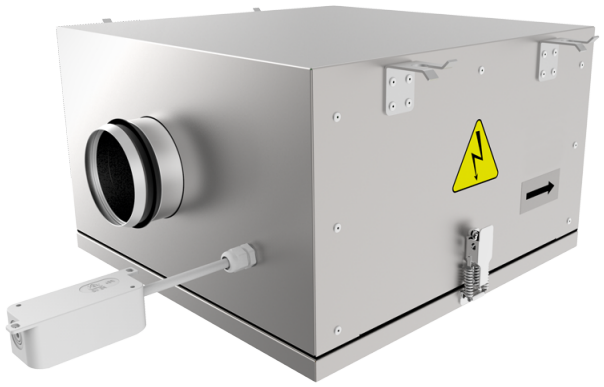

Iso-RB EC 250

Centrifugal inline fans with backward curved blades in cases with improved sound insulation properties with EC-motors

- Sound-insulated casing
- Impeller type: Centrifugal impeller with backward curved blades
- Casing material: Galvanized steel
- Installation in any position

	Unit of measurement	Iso-RB EC 250
Phases	-	1
Minimum supply voltage	V	230
Maximum supply voltage	V	230
Power supply frequency	Hz	50/60
Maximum airflow	m³/h	1097
Weight	kg	27
Transported air temperature (max)	°C	55
Transported air temperature (min)	°C	-25
Ingress protection rating	-	IPX4
Ingress protection rating of the drive	-	IP44
Impeller material	-	Plastic

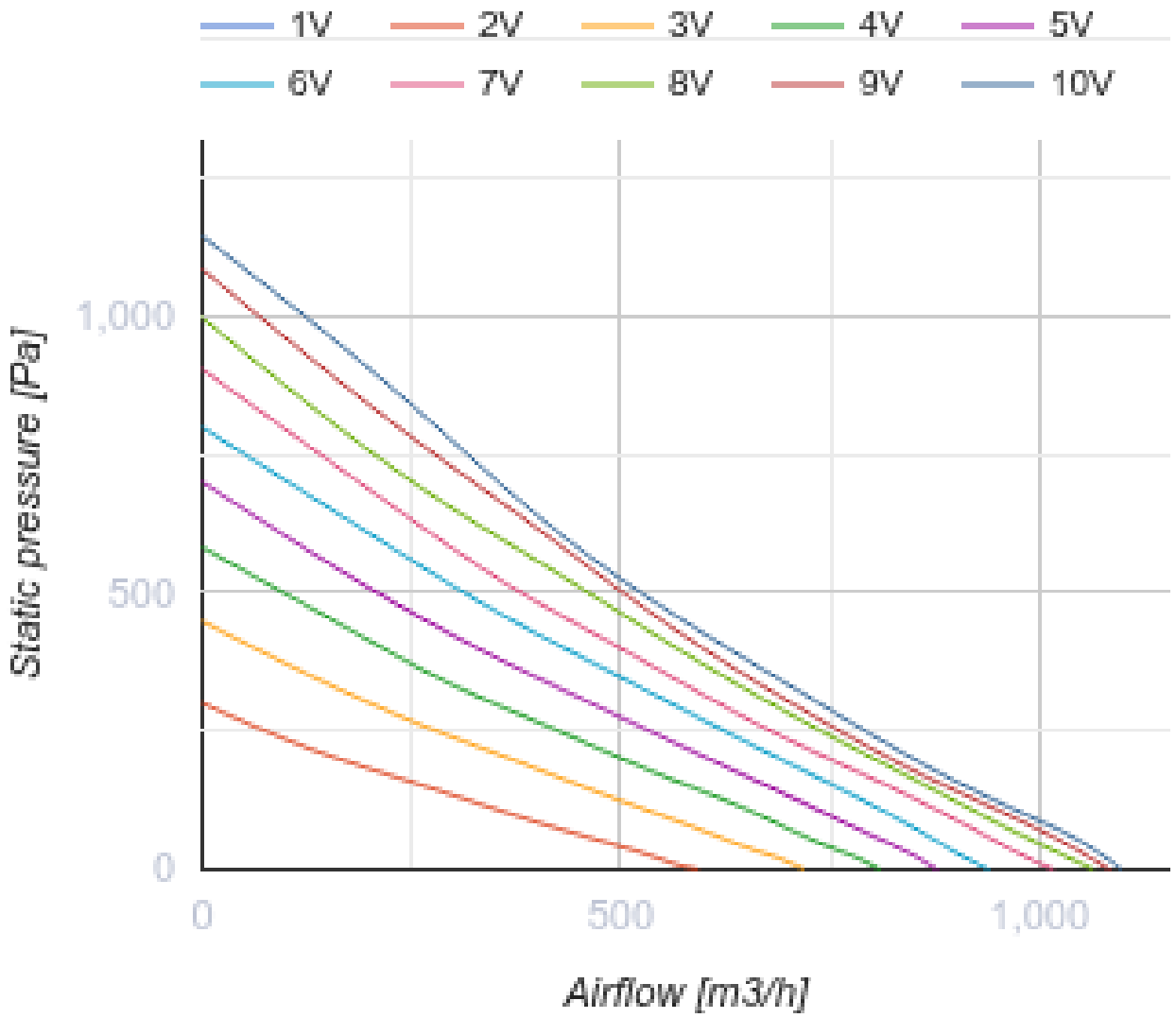
1V
2V
3V
4V
5V
6V
7V
8V
9V
10V
Static pressure [Pa]
1,000
500
0
0
500
1,000
Airflow [m3/h]

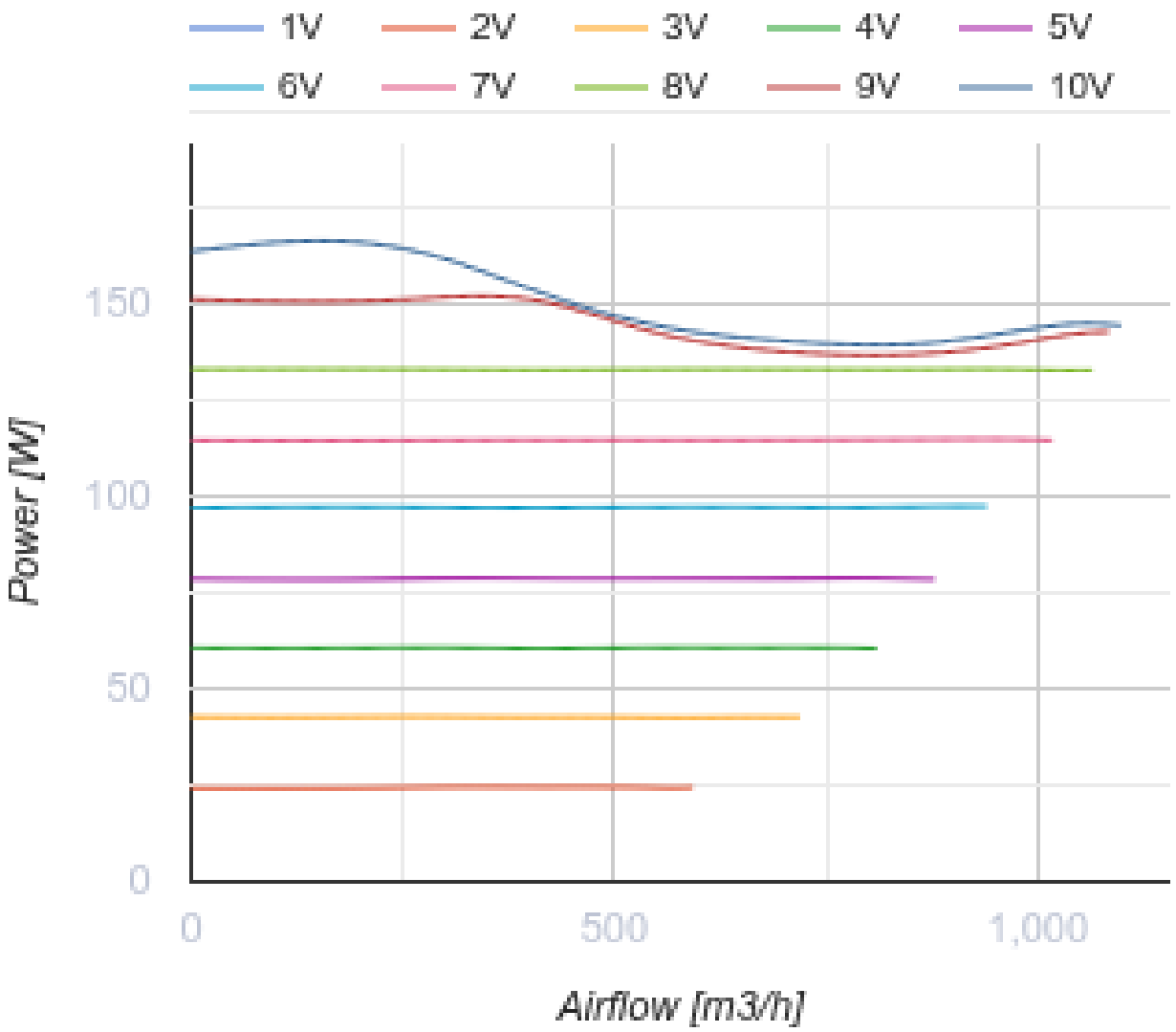

Dimensions

Ø D	B	B1	B2	H	L1	L2
248	665	487	762	371	709	616

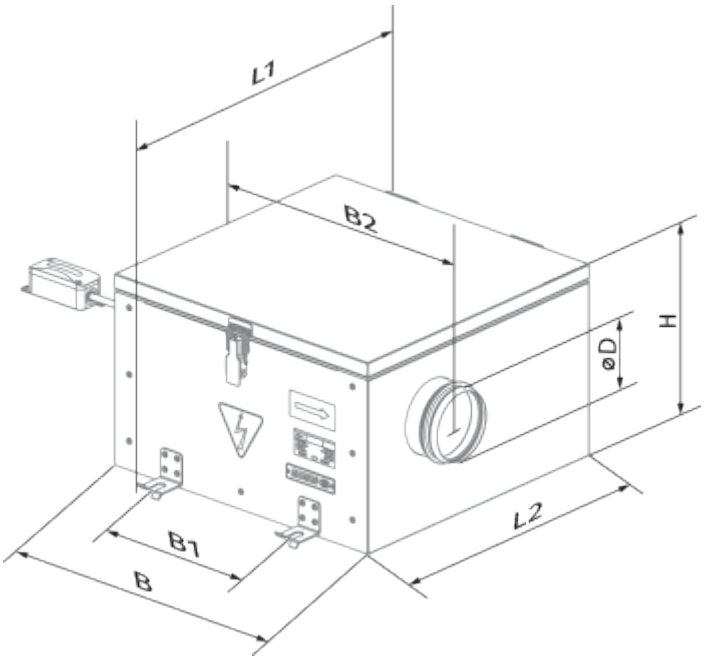
L1
B2
H
ØD
L2
B1
B

Ecodesign

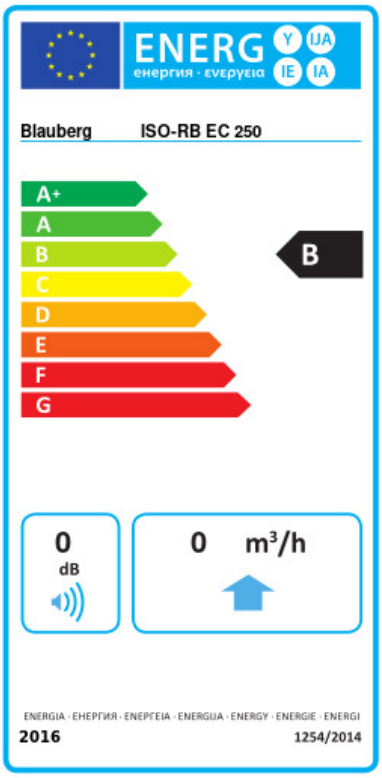

Trademark	Blauberg					
Model	Iso-RB EC 250					
Specific energy consumption (SEC) (kWh/(m²/a))	Cold		Average		Warm	
	-54.6	A+	-27.5	B	-12	E
Type of ventilation unit	Unidirectional					
Type of drive installed	Variable speed					
Type of heat recovery system	None					
Maximum flow rate (m³/h)	995					
Electric power input (W)	140.5					
Reference flow rate (m³/s)	0.193					
Reference pressure difference (Pa)	50					
Specific power input (SPI) (W/(m³/h))	0.061					
Control typology	Local demand control					
Maximum external leakage rates (%)	2.7					
Declared typology	RVU UVU					
Sound power level (dB(A))	65					
The annual electricity consumption (AEC) (kWh/a)	Cold		Average		Warm	
	32		32		32	
The annual heating saved (AHS) (kWh/a)	Cold		Average		Warm	
	5536		2830		1280	

Accessories

EC motors regulators

Name	Photo	Description
CDT E/0-10		Speed control for EC motors