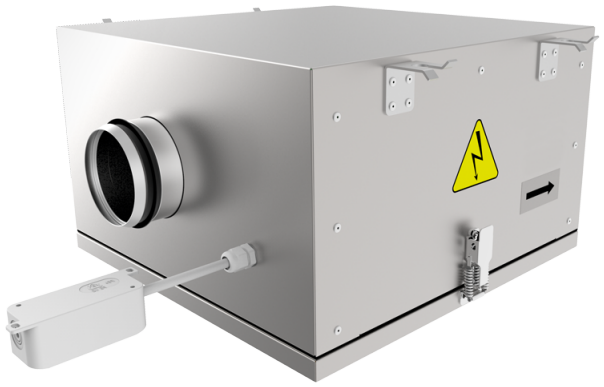

Iso-RB 500 (Δ)

Centrifugal inline fans with backward curved blades in cases with improved sound insulation properties

- Sound-insulated casing
- Impeller type: Centrifugal impeller with backward curved blades
- Casing material: Galvanized steel
- Installation in any position

	Unit of measurement	Iso-RB 500 (Δ)
Phases	-	1
Connection type	-	Δ
Minimum supply voltage	V	230
Maximum supply voltage	V	230
Power supply frequency	Hz	50
Maximum airflow	m³/h	7000
Weight	kg	129
Transported air temperature (max)	°C	55
Transported air temperature (min)	°C	-25
Ingress protection rating	-	IPX4
Ingress protection rating of the drive	-	IP54
Impeller material	-	Aluminium

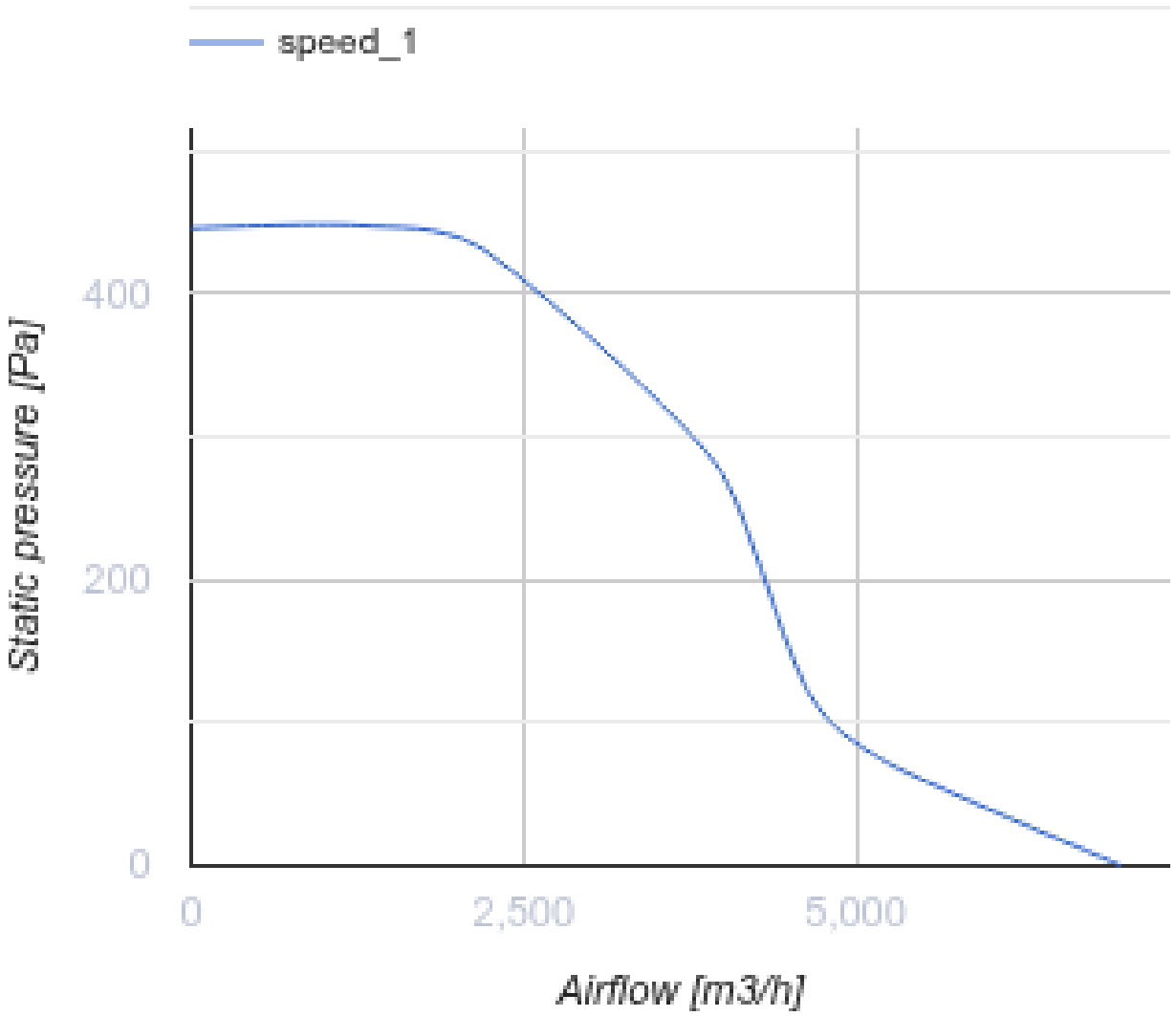
speed_1
400
200
0
Static pressure [Pa]
0
2,500
5,000
Airflow [m3/h]

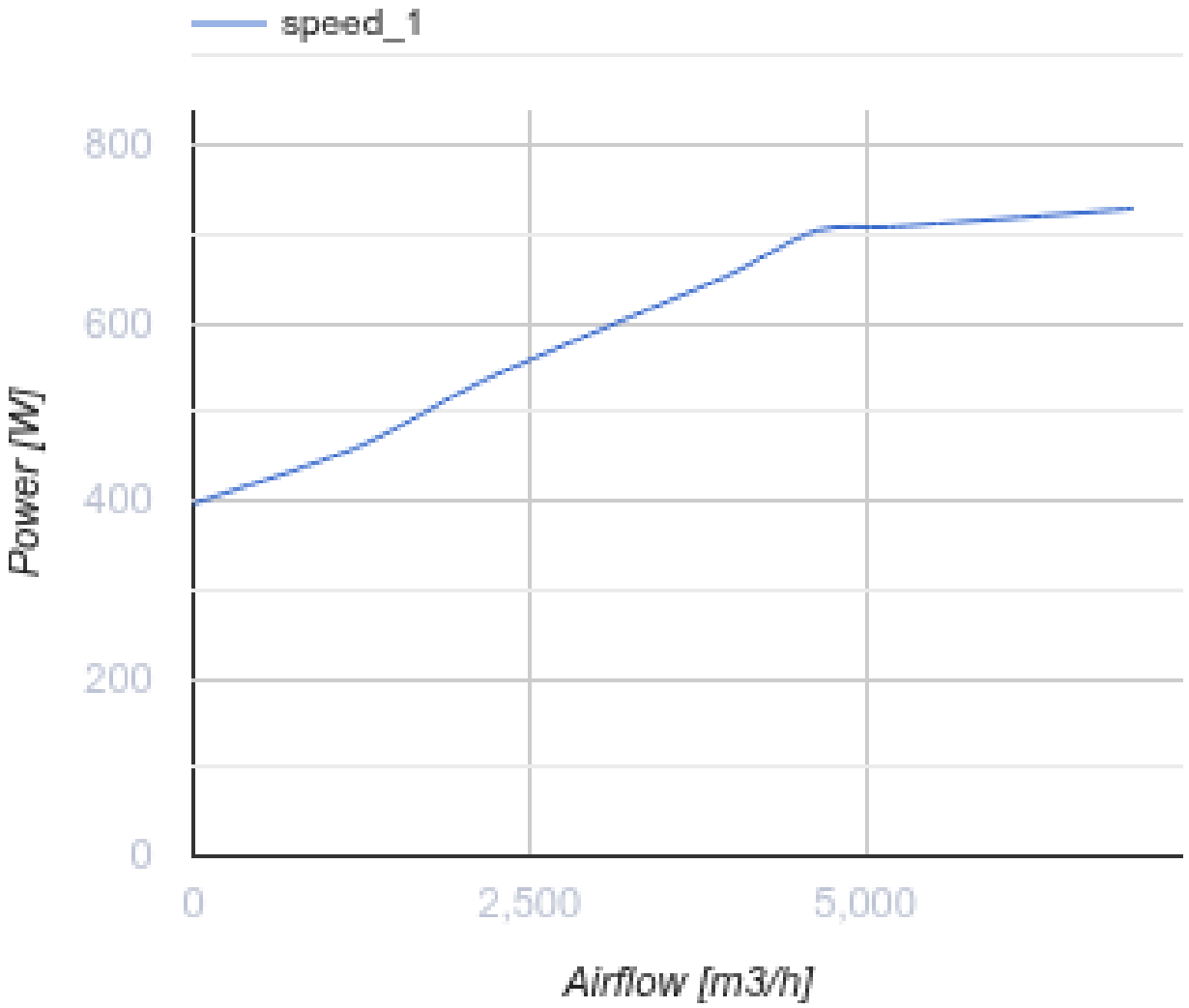

Dimensions

Ø D	B	B1	H	L	L1	L2
499	1203	993	744	1300	1263	1182

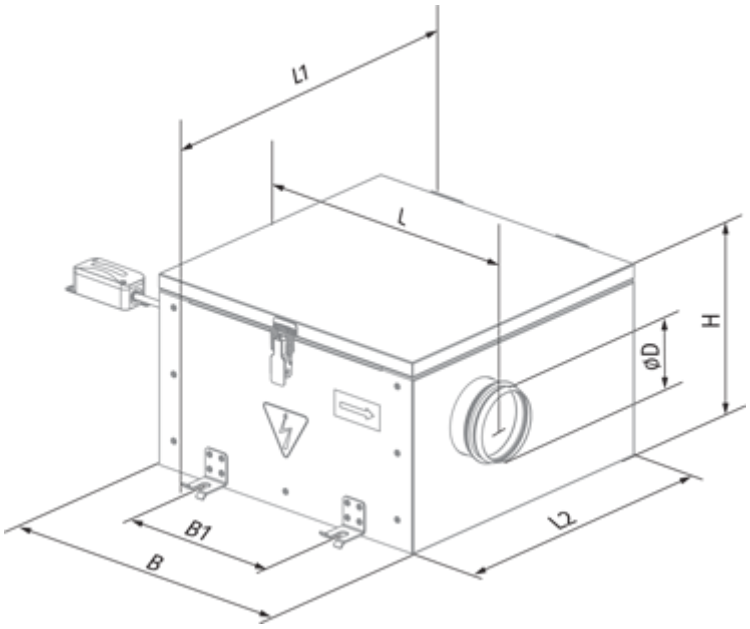

Accessories

Speed controllers

Name	Photo	Description
CDTE E3.0 TP		Speed controllers
CDTE E5.0 TP		Speed controllers
CDTE E10.0 TP		Speed controllers