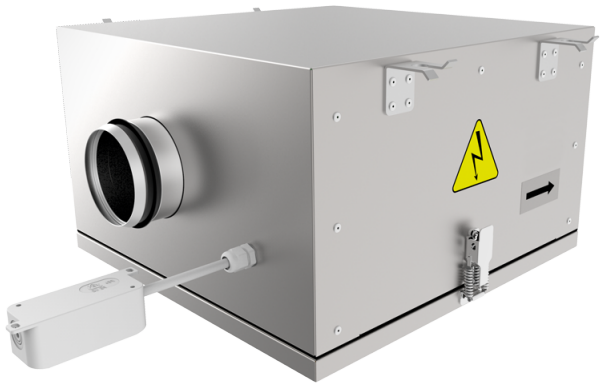

Iso-RB 450 L

Centrifugal inline fans with backward curved blades in cases with improved sound insulation properties

- Sound-insulated casing
- Impeller type: Centrifugal impeller with backward curved blades
- Casing material: Galvanized steel
- Installation in any position

	Unit of measurement	Iso-RB 450 L
Phases	-	1
Minimum supply voltage	V	230
Maximum supply voltage	V	230
Power supply frequency	Hz	50
Maximum airflow	m³/h	3750
Weight	kg	84
Transported air temperature (max)	°C	55
Transported air temperature (min)	°C	-25
Ingress protection rating	-	IPX4
Ingress protection rating of the drive	-	IP54
Impeller material	-	Aluminium

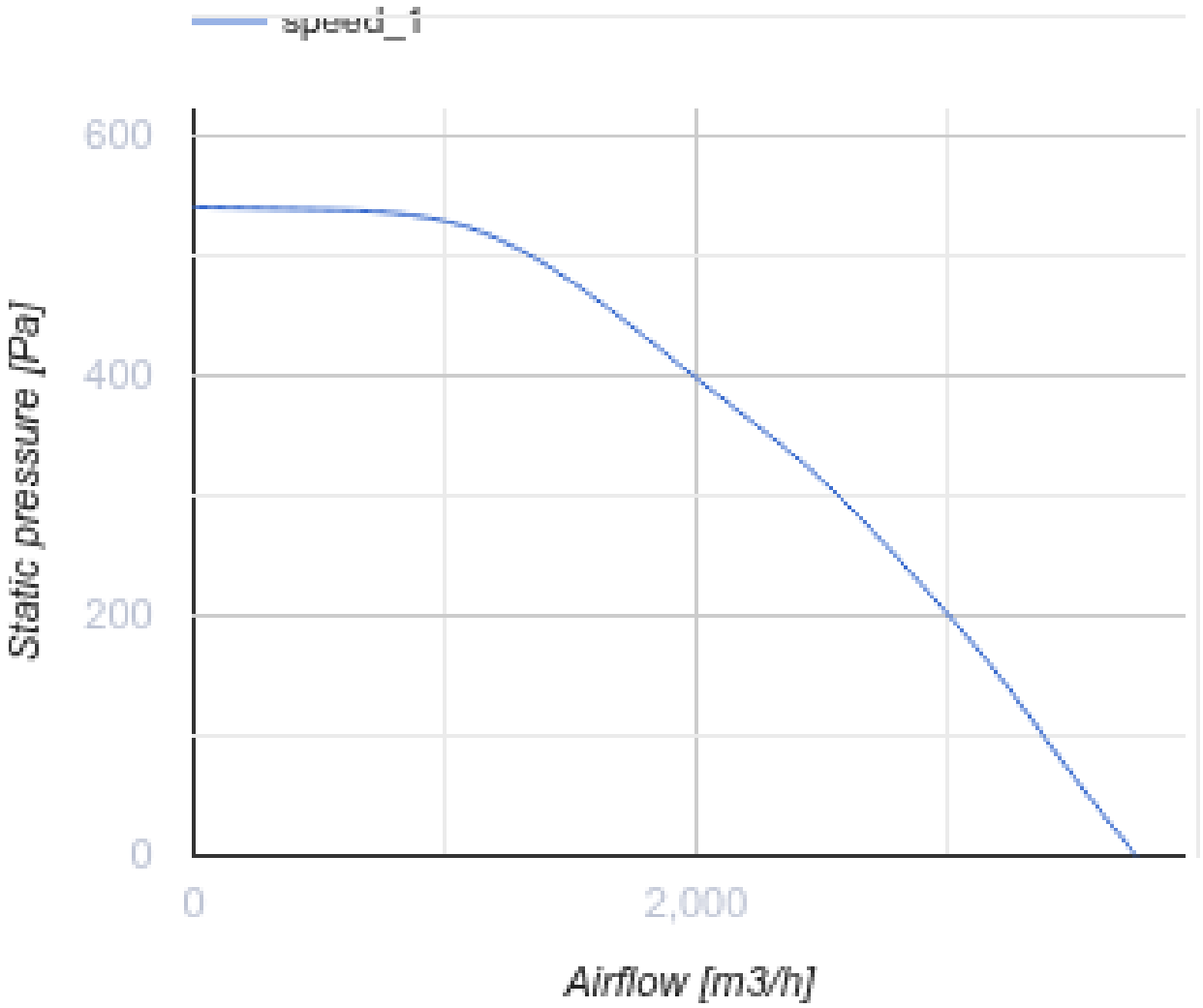
speed_1
600
400
200
0
Static pressure [Pa]
0
2,000
Airflow [m3/h]

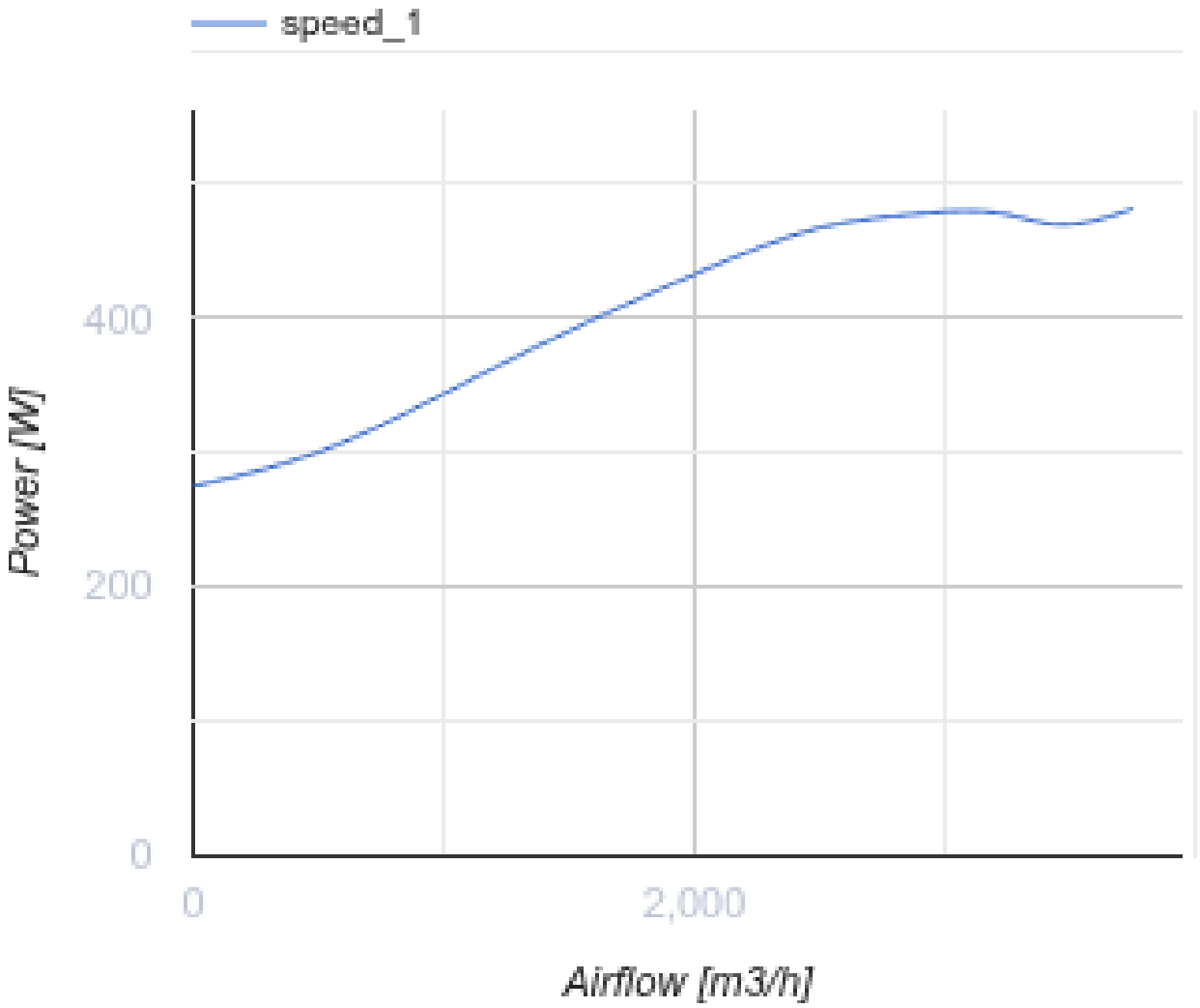

Dimensions

Ø D	B	B1	H	L	L1	L2
449	1049	858	607	1152	1049	968

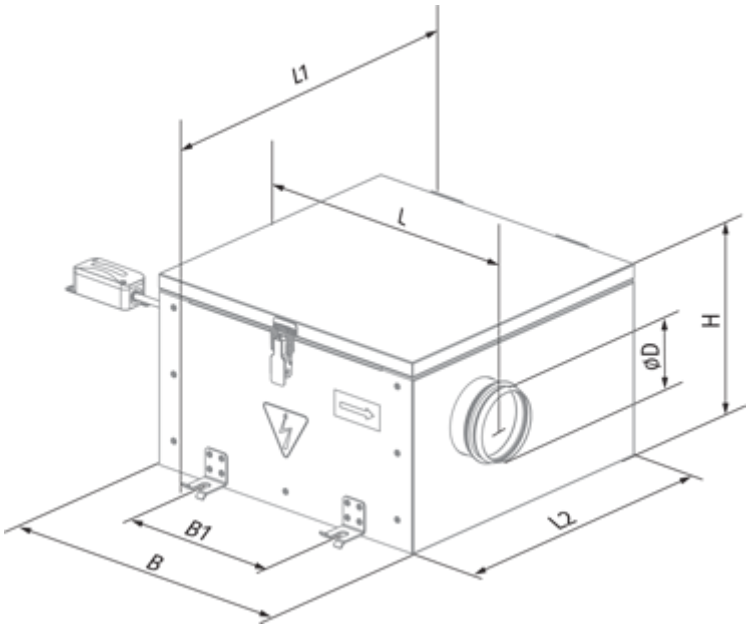
L1
L
H
øD
B1
B
L2

Ecodesign

Trademark	Blauberg
Model	Iso-RB 450 L
Type of ventilation unit	Unidirectional
Type of drive installed	External MSD or VSD
Type of heat recovery system	None
Nominal external pressure (Pa)	422
Maximum external leakage rates (%)	2.7
Static efficiency (%)	43
Declared typology	NRVU UVU
Effective electric power input (kW)	0.473
Sound power level (dB(A))	68

Accessories

For round ducts

Name	Photo	Description
VKA 450		Air dampers for round ducts

Speed controllers

Name	Photo	Description
CDTE E3.0 TP		Speed controllers
CDTE E5.0 TP		Speed controllers
CDTE E10.0 TP		Speed controllers