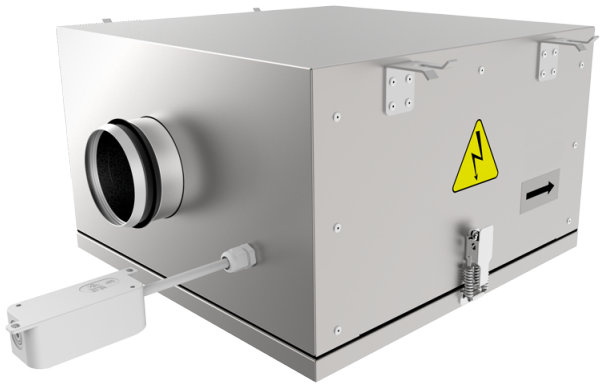

Iso-RB 400

Centrifugal inline fans with backward curved blades in cases with improved sound insulation properties

- Sound-insulated casing
- Impeller type: Centrifugal impeller with backward curved blades
- Casing material: Galvanized steel
- Installation in any position

	Unit of measurement	Iso-RB 400	
Phases	-	1	
Minimum supply voltage	V	230	
Maximum supply voltage	V	230	
Power supply frequency	Hz	50	60
Maximum airflow	m³/h	3800	
Weight	kg	78.5	
Transported air temperature (max)	°C	55	
Transported air temperature (min)	°C	-25	
Ingress protection rating	-	IPX4	
Ingress protection rating of the drive	-	IP54	
Impeller material	-	Aluminium	

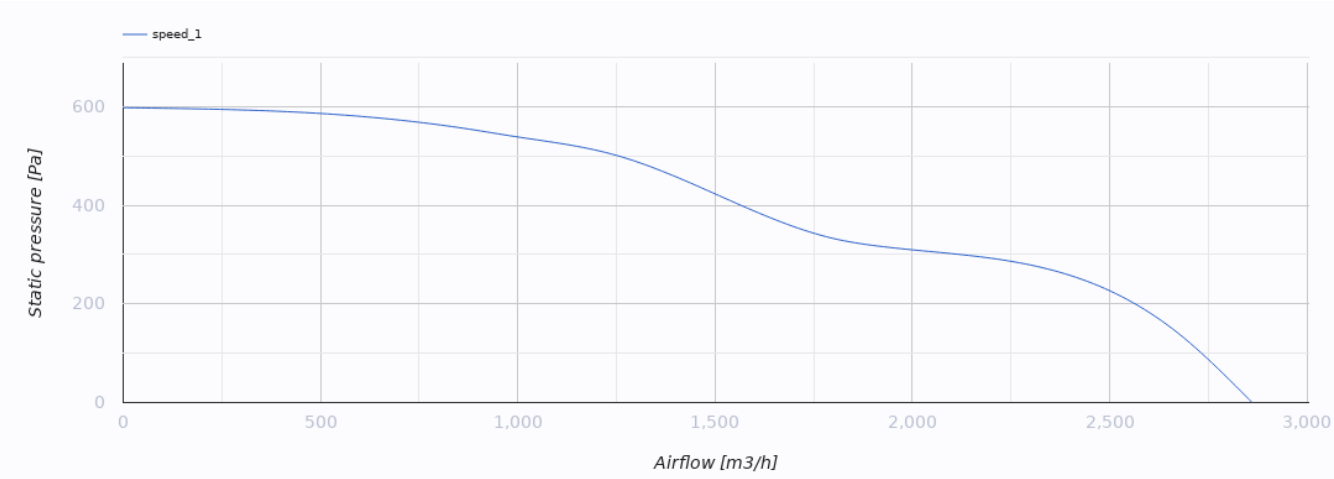

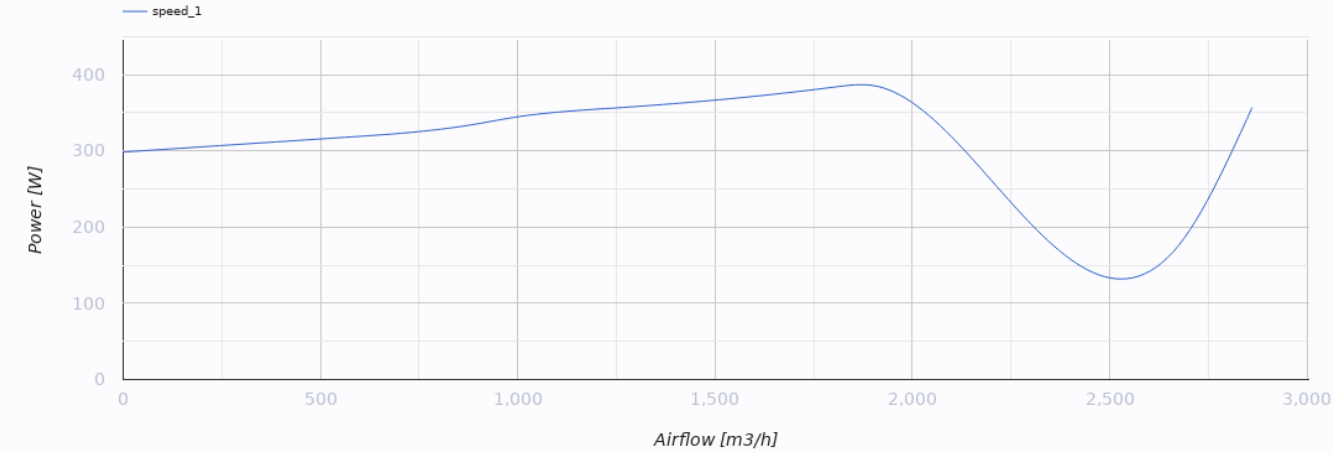

Dimensions

Ø D	B	B1	H	L	L1	L2
399	927	737	578	1024	957	876

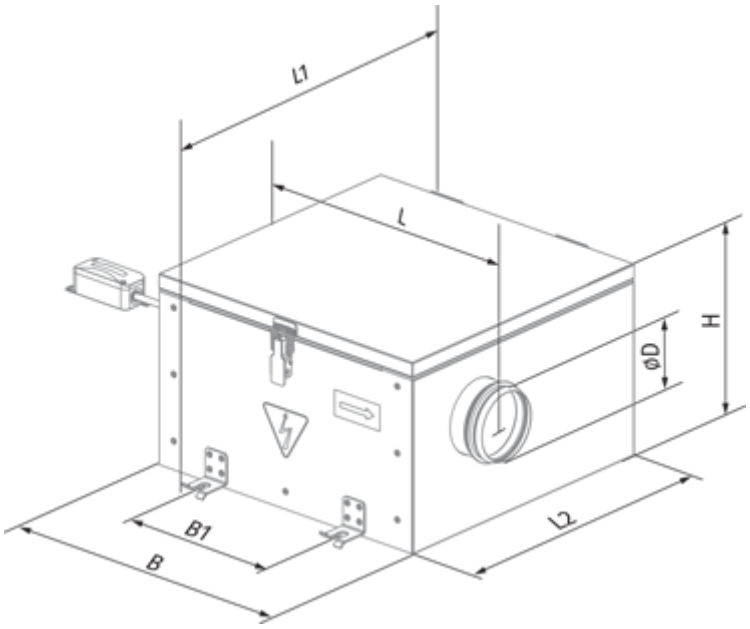
L1
L
H
øD
B1
B
L2

Ecodesign

Trademark	Blauberg
Model	Iso-RB 400
Type of ventilation unit	Unidirectional
Type of drive installed	External MSD or VSD
Type of heat recovery system	None
Nominal external pressure (Pa)	436
Maximum external leakage rates (%)	2.7
Static efficiency (%)	56.3
Declared typology	NRVU UVU
Effective electric power input (kW)	0.398
Sound power level (dB(A))	68

Accessories

For round ducts

Name	Photo	Description
SD 400/900		Silencers for round ducts
SD 400/1200		Silencers for round ducts

For round ducts

Name	Photo	Description
VKA 400		Air dampers for round ducts

Speed controllers

Name	Photo	Description
CDTE E3.0 TP		Speed controllers

CDTE E5.0 TP		Speed controllers
CDTE E10.0 TP		Speed controllers