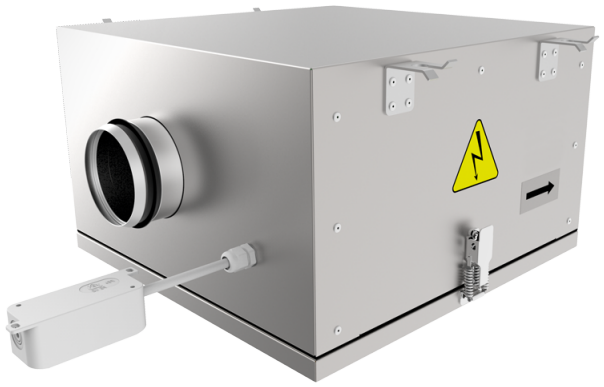

Iso-RB 100

Centrifugal inline fans with backward curved blades in cases with improved sound insulation properties

- Sound-insulated casing
- Impeller type: Centrifugal impeller with backward curved blades
- Casing material: Galvanized steel
- Installation in any position

	Unit of measurement	Iso-RB 100
Phases	-	1
Minimum supply voltage	V	230
Maximum supply voltage	V	230
Power supply frequency	Hz	50
Maximum airflow	m³/h	285
Weight	kg	13
Transported air temperature (max)	°C	55
Transported air temperature (min)	°C	-25
Ingress protection rating	-	IPX4
Ingress protection rating of the drive	-	IP44
Impeller material	-	Plastic

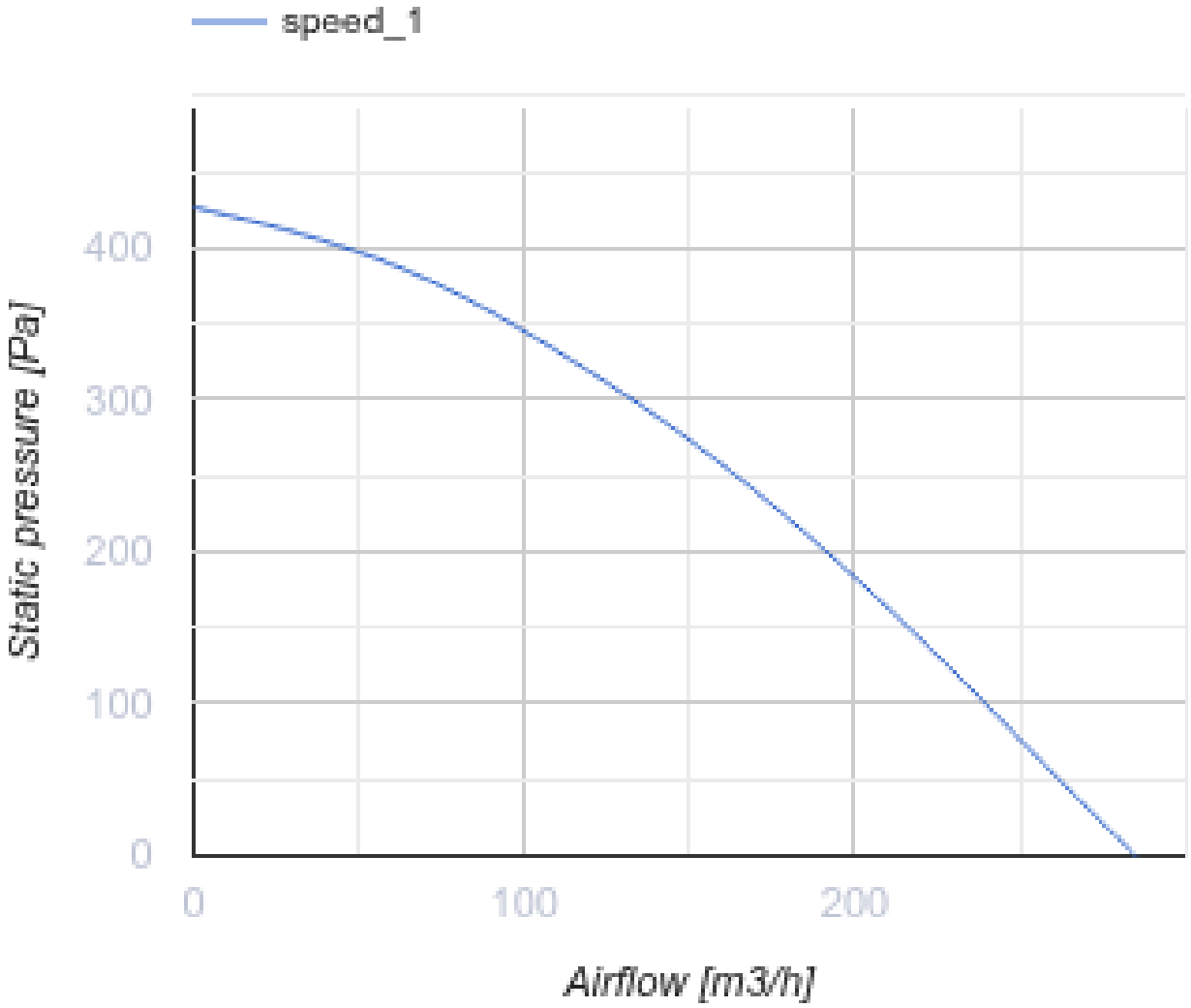
speed_1
Static pressure [Pa]
400
300
200
100
0
0
100
200
Airflow [m3/h]

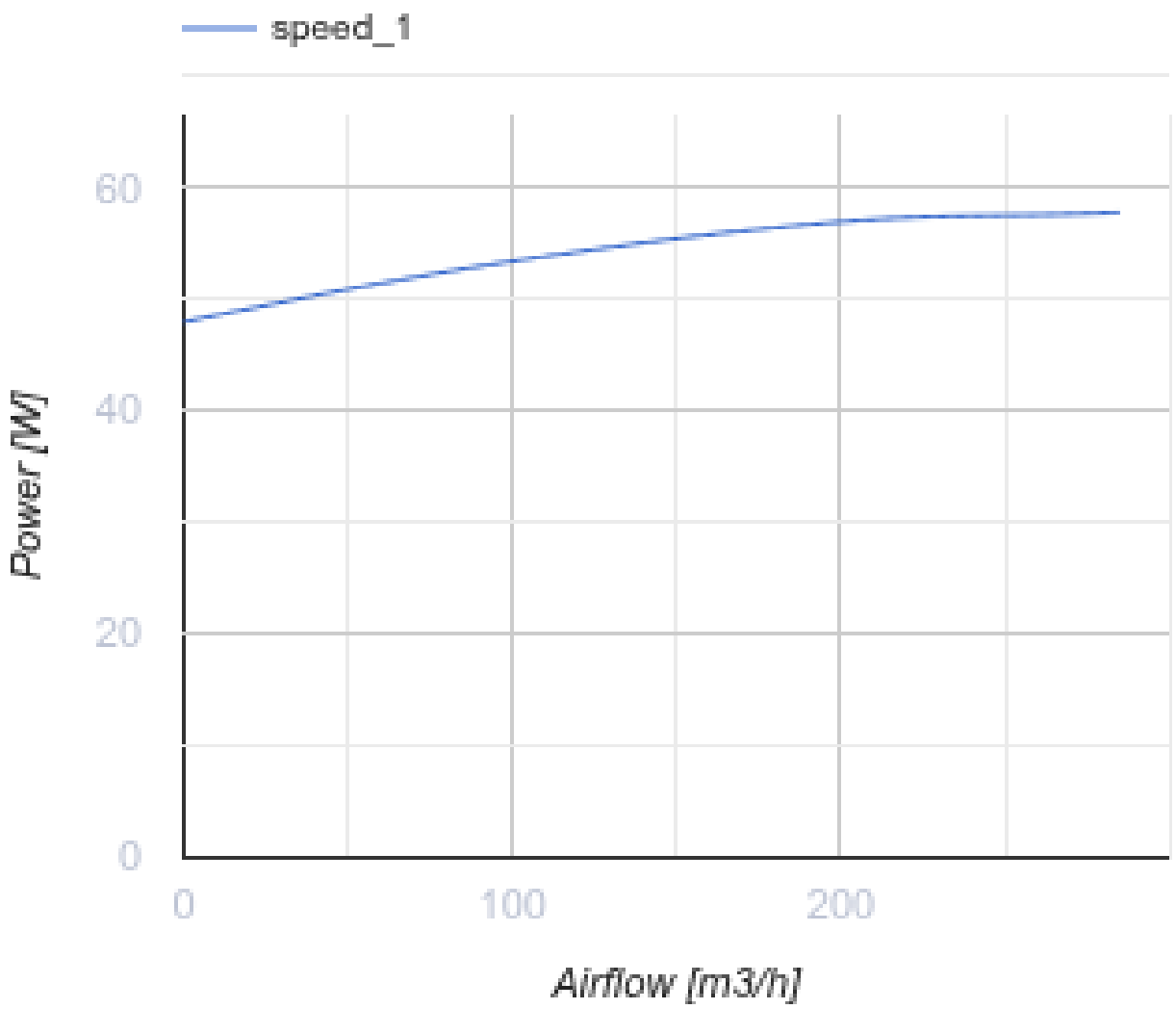

Dimensions

ØD	B	B1	H	L	L1	L2
99	420	228	258	517	507	414

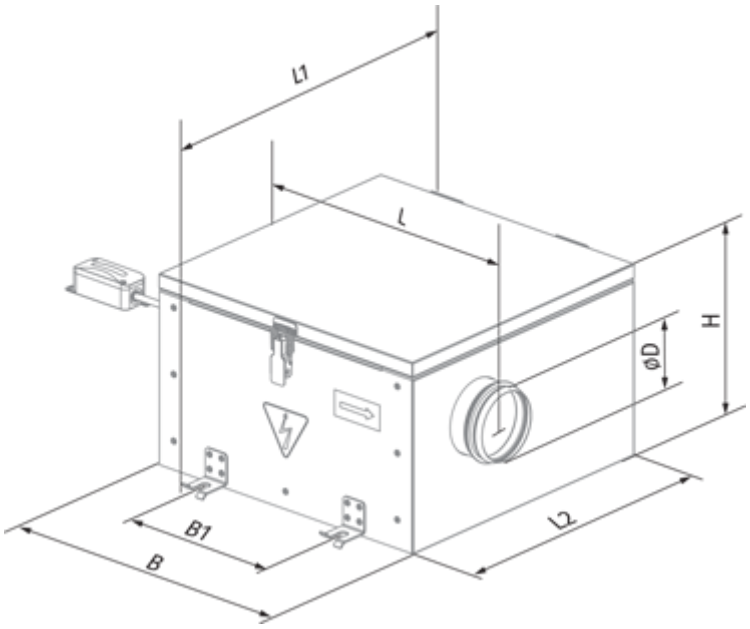
L1
L
H
øD
B1
B
L2

Ecodesign

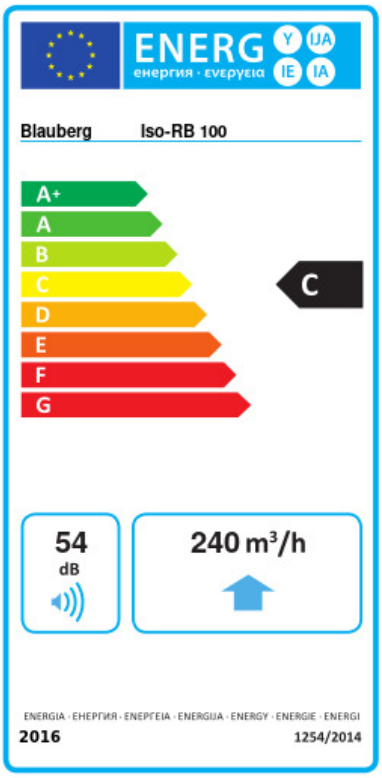

Trademark	Blauberg					
Model	Iso-RB 100					
Specific energy consumption (SEC) (kWh/(m²/a))	Cold		Average		Warm	
	-51	A+	-23.9	C	-8.4	F
Type of ventilation unit	Unidirectional					
Type of drive installed	Variable speed					
Type of heat recovery system	None					
Maximum flow rate (m³/h)	240					
Electric power input (W)	58					
Reference flow rate (m³/s)	0.047					
Reference pressure difference (Pa)	50					
Specific power input (SPI) (W/(m³/h))	0.333					
Control typology	Local demand control					
Maximum external leakage rates (%)	2.7					
Declared typology	RVU UVU					
Sound power level (dB(A))	54					
The annual electricity consumption (AEC) (kWh/a)	Cold		Average		Warm	
	176		176		176	
The annual heating saved (AHS) (kWh/a)	Cold		Average		Warm	
	5536		2830		1280	

Accessories

For round ducts

Name	Photo	Description
SD 100/600		Silencers for round ducts
SD 100/900		Silencers for round ducts
SD 100/1200		Silencers for round ducts

For round ducts

Name	Photo	Description
KFBK 100		Filter boxes for round ducts
KFBT 100 G4	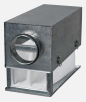	Filter boxes with pocket filters for round ducts
KFBT 100 F5		Filter boxes with pocket filters for round ducts
KFBT 100 F7		Filter boxes with pocket filters for round ducts

For round ducts

Name	Photo	Description
VRV 100		Backdraft dampers with spring for round ducts
VKA 100		Air dampers for round ducts

Water heaters

Name	Photo	Description
WKH 100-2		Duct water heaters for round ducts
WKH 100-4		Duct water heaters for round ducts

Electrical heaters

Name	Photo	Description
EKH 100-0.6		Duct electrical heaters for round ducts
EKH 100-0.8		Duct electrical heaters for round ducts

EKH 100-1.2		Duct electrical heaters for round ducts
EKH 100-1.6		Duct electrical heaters for round ducts
EKH 100-1.8		Duct electrical heaters for round ducts

Speed controllers

Name	Photo	Description
CDT E1.8		Thyristor speed controller