

# Iso-Primo EC 200 W

Mixed-flow inline fans in sound-insulated casings with EC-motors

- Sound-insulated casing
- Impeller type: Mixed-flow
- Casing material: Galvanized steel
- Installation in any position
- Cable with mains plug

| | Unit of measurement | Iso-Primo EC 200 W |
|---|---|---|
| Phases | - | 1 |
| Minimum supply voltage | V | 230 |
| Maximum supply voltage | V | 230 |
| Power supply frequency | Hz | 50/60 |
| Maximum airflow | $m^3/h$ | 1210 |
| Weight | kg | 8.2 |
| Transported air temperature (max) | °C | 55 |
| Transported air temperature (min) | °C | -25 |
| Ambient air temperature min | °C | 1 |
| Ambient air temperature max | °C | 40 |
| Ingress protection rating | - | IPX4 |
| Ingress protection rating of the drive | - | IP44 |
| Impeller material | - | Plastic |

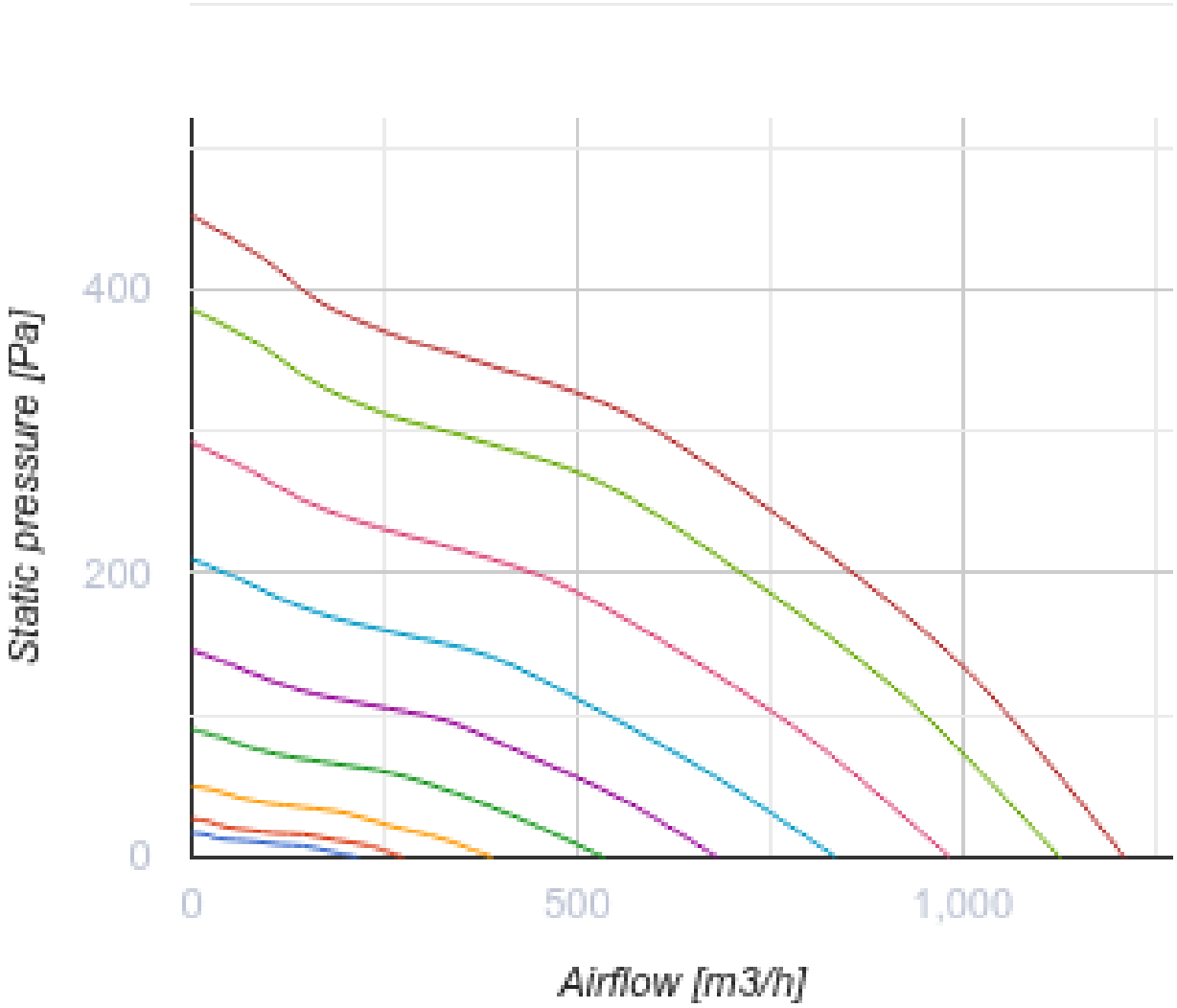
Static pressure [Pa]
400
200
0
0
500
1,000
Airflow [m3/h]

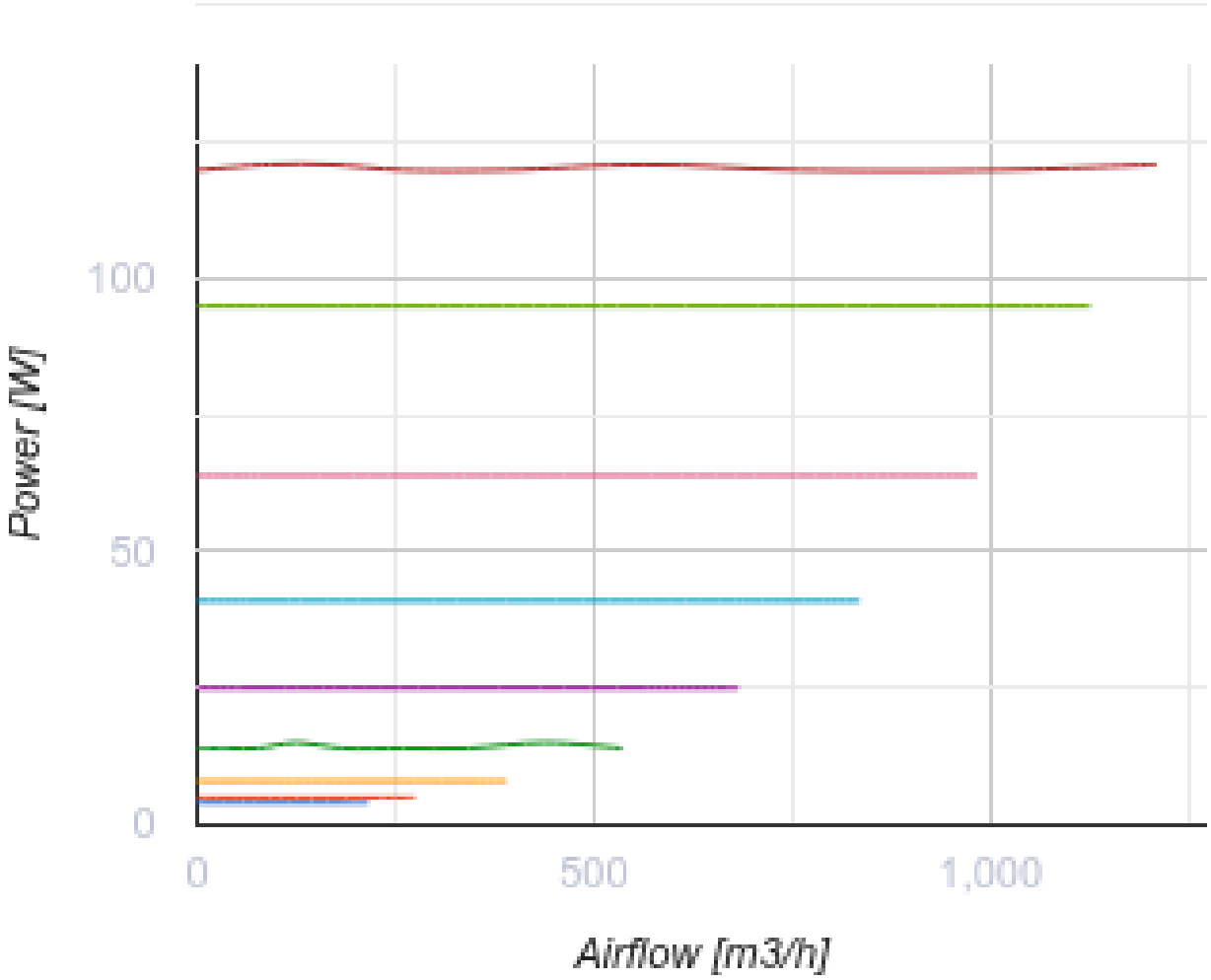


## Dimensions

| Ø D | Ø D1 | H | L | L1 |
|---|---|---|---|---|
| 199 | 281 | 339 | 601 | 739 |

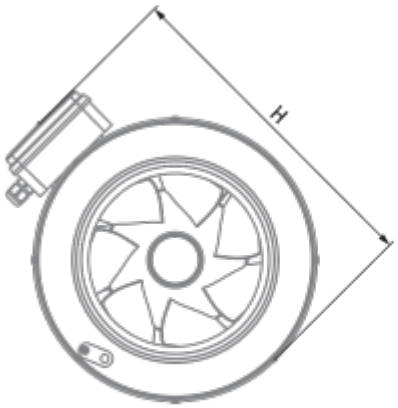
H

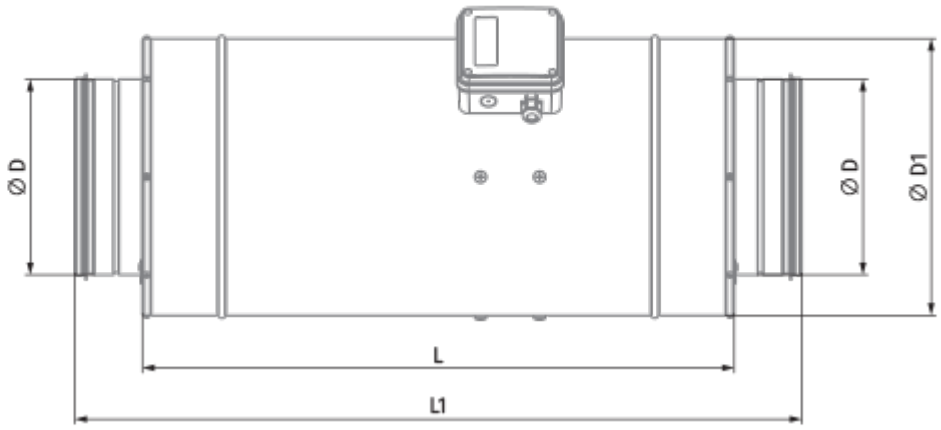
Ø D
Ø D
Ø D1
L
L1

## Ecodesign

| | |
|---|---|
| Trademark | Blauberg |
| Model | Iso-Primo EC 200 W |

## Accessories

### For round ducts

| Name | Photo | Description |
|---|---|---|
| SD 200/600 |  | Silencers for round ducts |
| SD 200/900 |  | Silencers for round ducts |
| SD 200/1200 |  | Silencers for round ducts |

### For round ducts

| Name | Photo | Description |
|---|---|---|
| KFBK 200 |  | Filter boxes for round ducts |
| KFBT 200 G4 |  | Filter boxes with pocket filters for round ducts |
| KFBT 200 F5 |  | Filter boxes with pocket filters for round ducts |
| KFBT 200 F7 |  | Filter boxes with pocket filters for round ducts |

### For round ducts

| Name | Photo | Description |
|---|---|---|

| | | |
|---|---|---|
| VRV 200 |  | Backdraft dampers with spring for round ducts |
| VKA 200 |  | Air dampers for round ducts |

### Water heaters

| Name | Photo | Description |
|---|---|---|
| WKH 200-2 |  | Duct water heaters for round ducts |
| WKH 200-4 |  | Duct water heaters for round ducts |

### Electrical heaters

| Name | Photo | Description |
|---|---|---|
| EKH 200-1.2 |  | Duct electrical heaters for round ducts |
| EKH 200-1.7 |  | Duct electrical heaters for round ducts |
| EKH 200-2.0 |  | Duct electrical heaters for round ducts |
| EKH 200-2.4 |  | Duct electrical heaters for round ducts |
| EKH 200-3.4 |  | Duct electrical heaters for round ducts |
| EKH 200-3.6 |  | Duct electrical heaters for round ducts |
| EKH 200-5.1 |  | Duct electrical heaters for round ducts |
| EKH 200-6.0 |  | Duct electrical heaters for round ducts |

### EC motors regulators

| Name | Photo | Description |
|---|---|---|
| CDT E/0-10 |  | Speed control for EC motors |