

Iso-Primo 400 US

Mixed-flow inline fans in sound-insulated casings

- Sound-insulated casing
- Control: Speed switch
- Impeller type: Mixed-flow
- Casing material: Galvanized steel
- Installation in any position

	Unit of measurement	Iso-Primo 400 US		
Speed	-	1	2	3
Phases	-	1		
Minimum supply voltage	V	230		
Maximum supply voltage	V	230		
Power supply frequency	Hz	50		
Maximum airflow	m³/h	2543	2979	3185
Weight	kg	22.8		
Transported air temperature (max)	°C	55		
Transported air temperature (min)	°C	-25		
Ambient air temperature max	°C	40		
Ambient air temperature min	°C	1		
Ingress protection rating	-	IPX4		
Ingress protection rating of the drive	-	IP20		
Impeller material	-	Plastic		

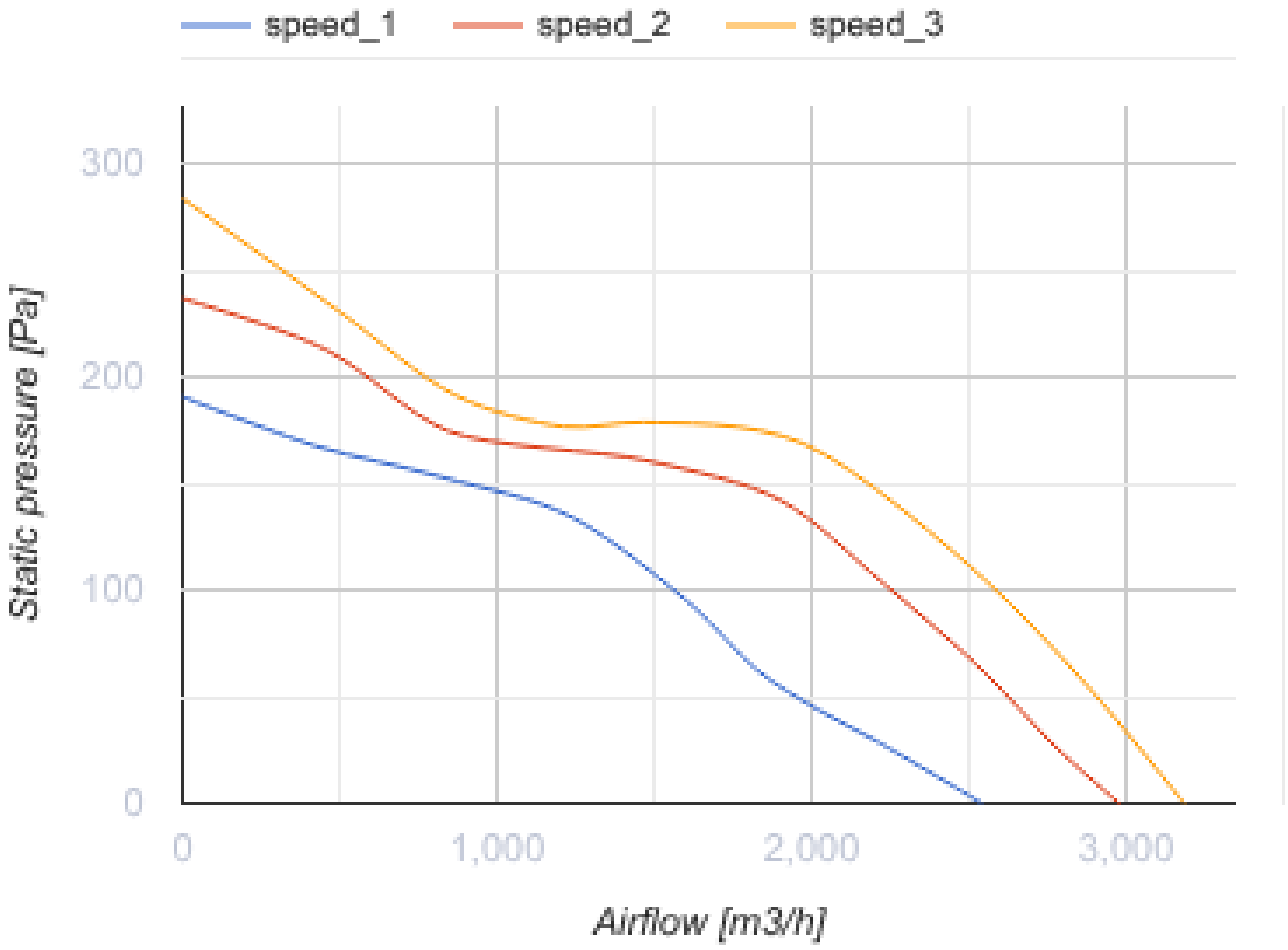
speed_1
speed_2
speed_3
300
200
100
0
Static pressure [Pa]
0
1,000
2,000
3,000
Airflow [m3/h]

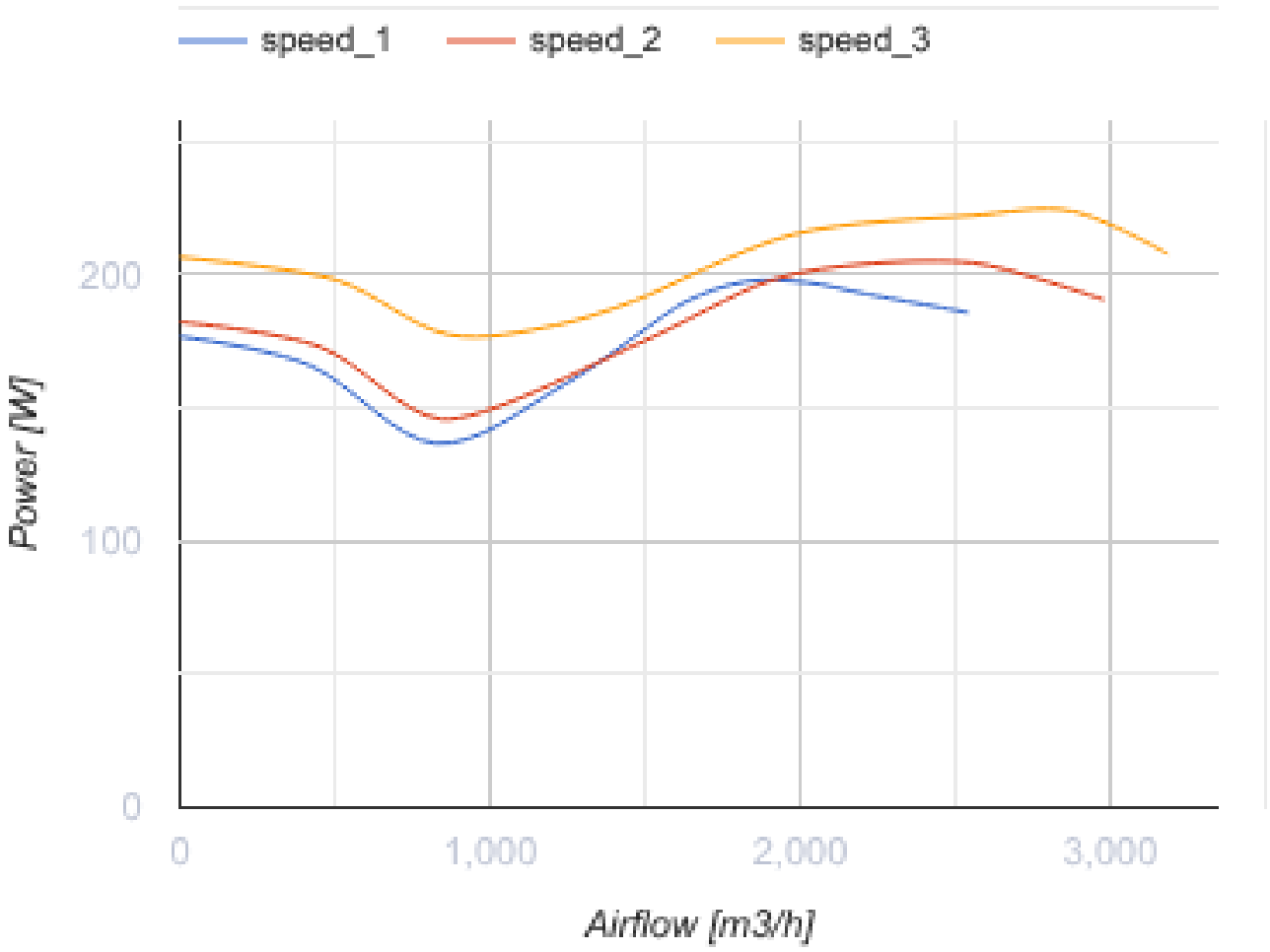

Dimensions

Ø D	Ø D1	H	L	L1
399	460	517	648	785

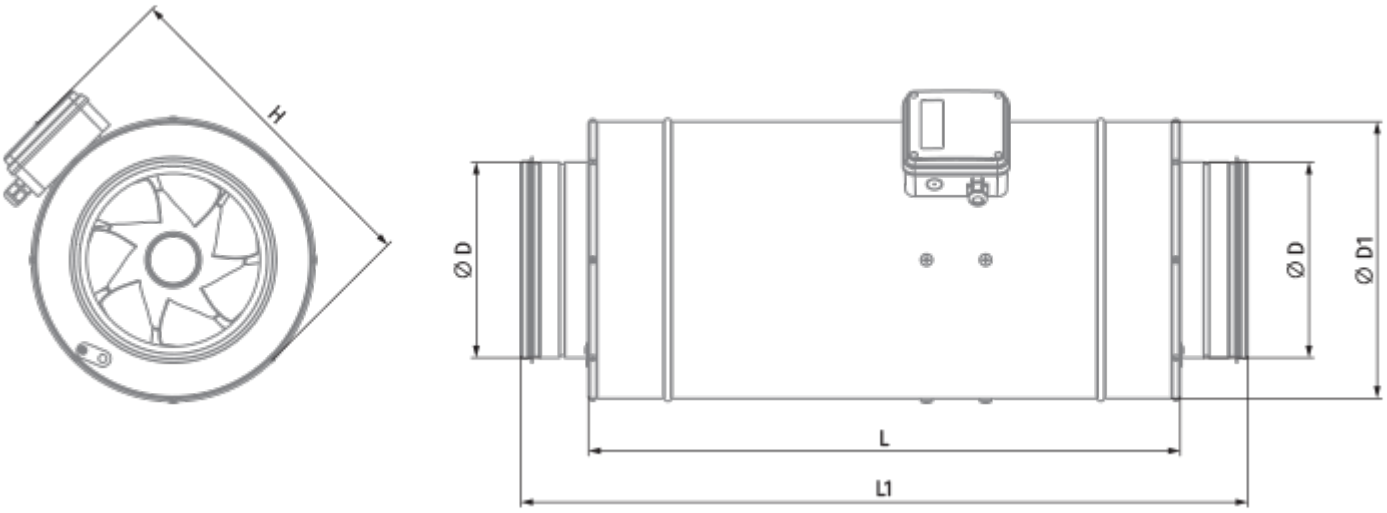

Accessories

For round ducts

Name	Photo	Description
SD 400/900		Silencers for round ducts
SD 400/1200		Silencers for round ducts

For round ducts

Name	Photo	Description
VKA 400		Air dampers for round ducts

Speed controllers

Name	Photo	Description
CDT E1.8		Thyristor speed controller
CDT1 E1.5		Multi-speed switches
CDTE E3.0 TP		Speed controllers

Speed control switches

Name	Photo	Description
CDP-3/5		Multi-speed switch