

Iso-Primo 250 T

Mixed-flow inline fans in sound-insulated casings

- Sound-insulated casing
- Impeller type: Mixed-flow
- Casing material: Galvanized steel
- Installation in any position
- Timer: Turn off timer

	Unit of measurement	Iso-Primo 250 T		
Speed	-	1	2	3
Phases	-	1		
Minimum supply voltage	V	230		
Maximum supply voltage	V	230		
Power supply frequency	Hz	50		
Maximum airflow	m³/h	1007	1404	1670
Weight	kg	9.8		
Transported air temperature (max)	°C	55		
Transported air temperature (min)	°C	-25		
Ambient air temperature min	°C	1		
Ambient air temperature max	°C	40		
Ingress protection rating	-	IPX4		
Ingress protection rating of the drive	-	IP20		
Impeller material	-	Plastic		

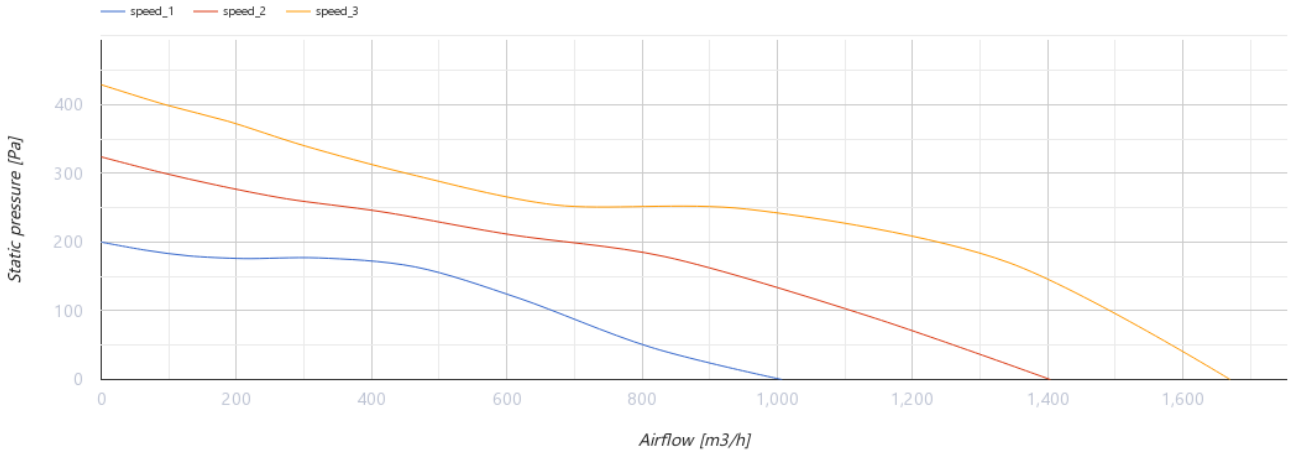

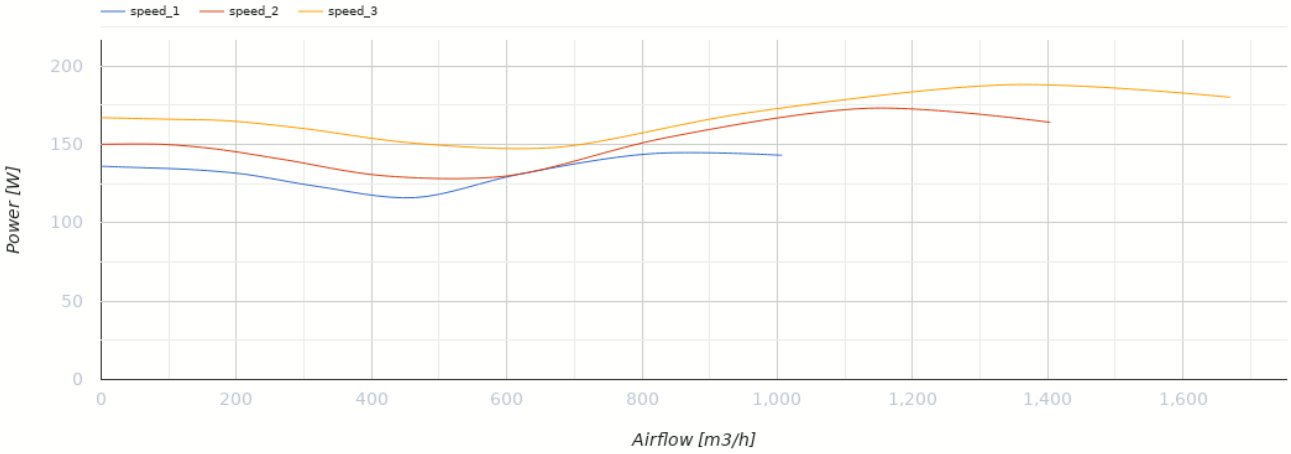

Dimensions

ØD	ØD1	H	L	L1
249	337	389	601	739

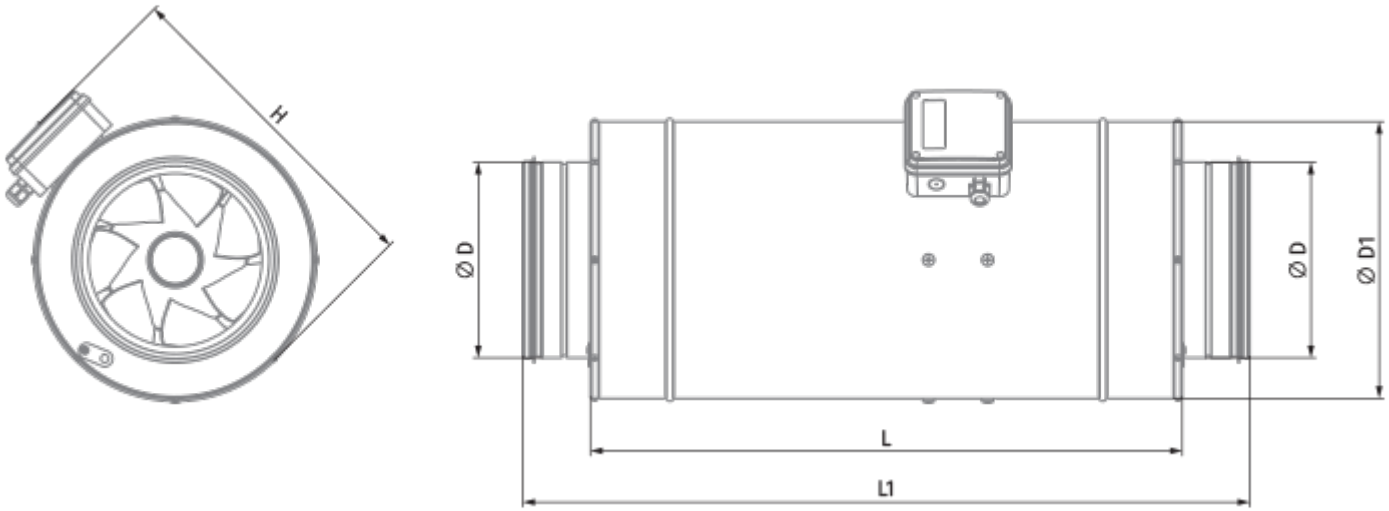

Ecodesign

Trademark	Blauberg
Model	Iso-Primo 250 T
Type of drive installed	Integrated VSD
Type of heat recovery system	None
Nominal external pressure (Pa)	248
Maximum external leakage rates (%)	2.7
Static efficiency (%)	39.5
Declared typology	NRVU UVU
Effective electric power input (kW)	0.17
Sound power level (dB(A))	58

Accessories

For round ducts

Name	Photo	Description
SD 250/600		Silencers for round ducts
SD 250/900		Silencers for round ducts
SD 250/1200		Silencers for round ducts

For round ducts

Name	Photo	Description
KFBK 250		Filter boxes for round ducts
KFBT 250 G4		Filter boxes with pocket filters for round ducts
KFBT 250 F5		Filter boxes with pocket filters for round ducts

KFBT 250 F7		Filter boxes with pocket filters for round ducts

For round ducts

Name	Photo	Description
VRV 250		Backdraft dampers with spring for round ducts
VKA 250		Air dampers for round ducts

Water heaters

Name	Photo	Description
WKH 250-2		Duct water heaters for round ducts
WKH 250-4		Duct water heaters for round ducts

Electrical heaters

Name	Photo	Description
EKH 250-1.2		Duct electrical heaters for round ducts
EKH 250-2.0		Duct electrical heaters for round ducts
EKH 250-2.4		Duct electrical heaters for round ducts
EKH 250-3.0		Duct electrical heaters for round ducts
EKH 250-3.6		Duct electrical heaters for round ducts
EKH 250-6.0		Duct electrical heaters for round ducts

EKH 250-9.0		Duct electrical heaters for round ducts

Speed controllers

Name	Photo	Description
CDT E1.8		Thyristor speed controller
CDT1 E1.5		Multi-speed switches
CDTE E3.0 TP		Speed controllers

Speed control switches

Name	Photo	Description
CDP-3/5		Multi-speed switch