

Iso-Mix EC 315 GI1

Mixed-flow inline fans in sound-insulated casings with EC-motors

- Sound-insulated casing
- Control: Built-in speed controller
- Impeller type: Mixed-flow
- Casing material: Coated steel
- Installation in any position
- Cable with mains plug
- Temperature sensor

	Unit of measurement	Iso-Mix EC 315 GI1
Phases	-	1
Minimum supply voltage	V	230
Maximum supply voltage	V	230
Power supply frequency	Hz	50/60
Maximum airflow	m³/h	1810
Weight	kg	19.8
Transported air temperature (max)	°C	55
Transported air temperature (min)	°C	-25
Ingress protection rating	-	IPX4
Impeller material	-	Plastic

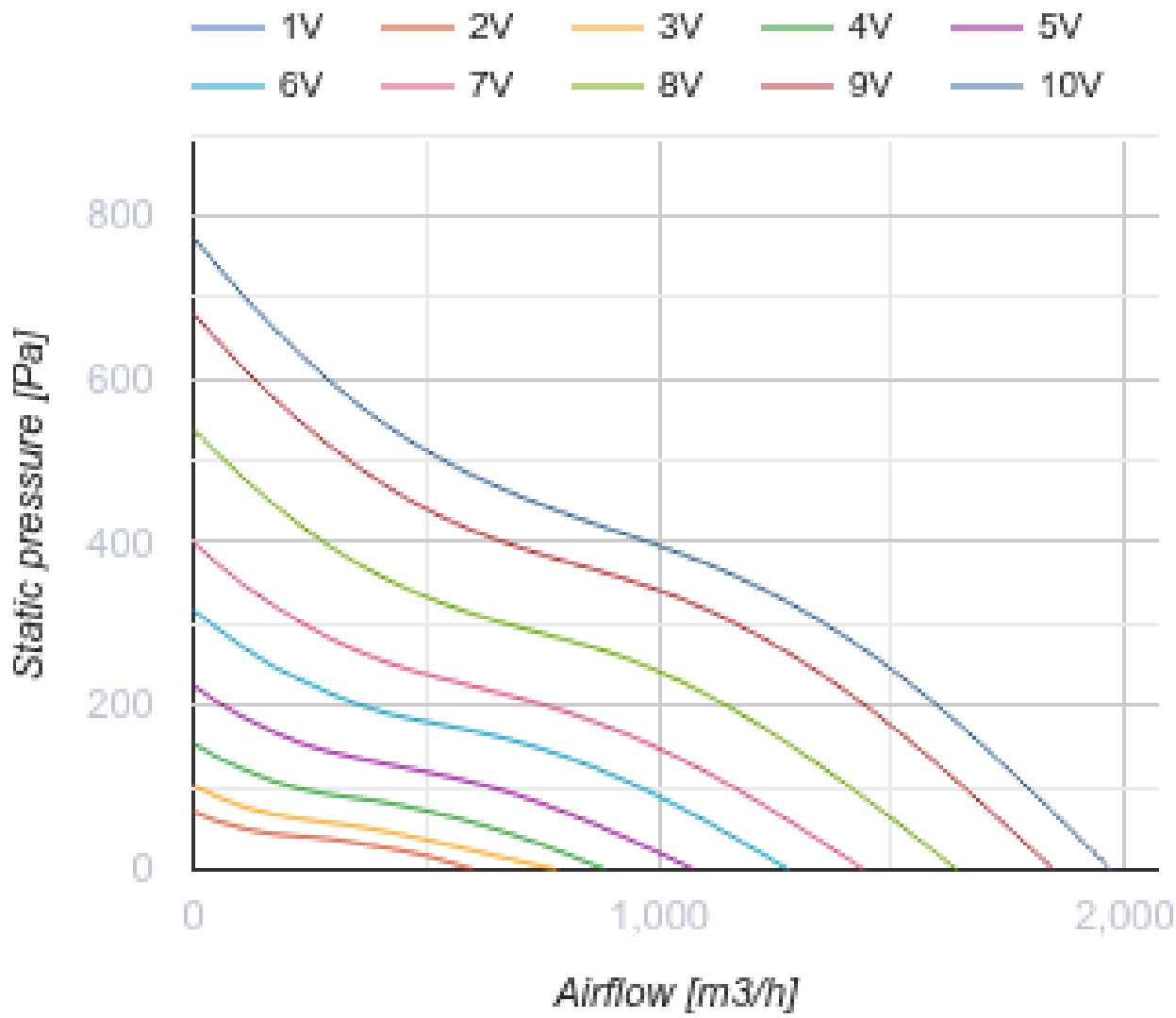
1V
2V
3V
4V
5V
6V
7V
8V
9V
10V
800
600
400
200
0
Static pressure [Pa]
0
1,000
2,000
Airflow [m3/h]

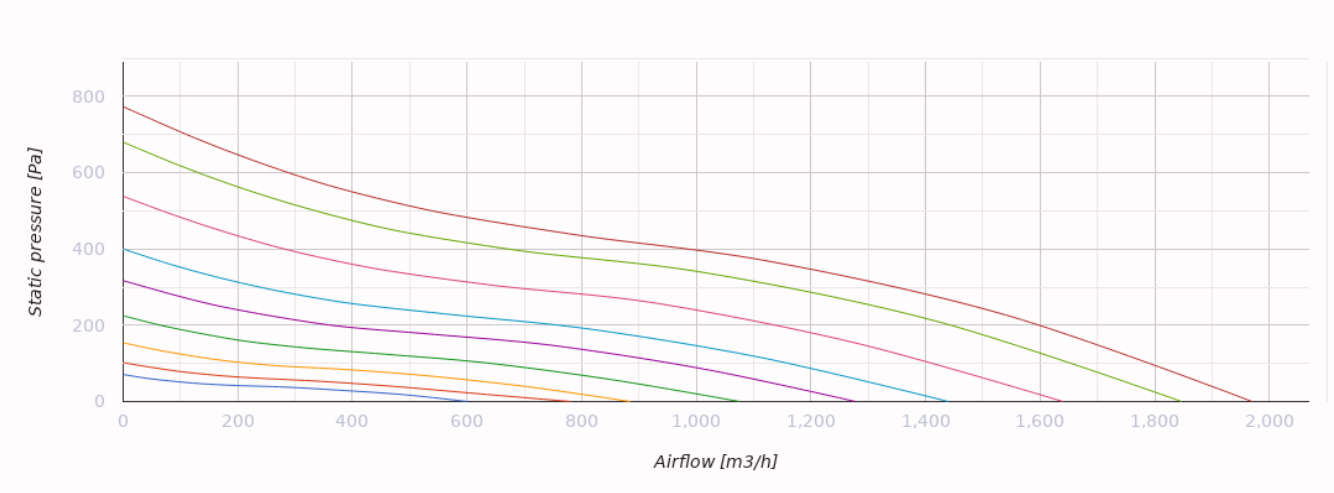
800
600
400
200
0
Static pressure [Pa]
0
200
400
600
800
1,000
1,200
1,400
1,600
1,800
2,000
Airflow [m3/h]

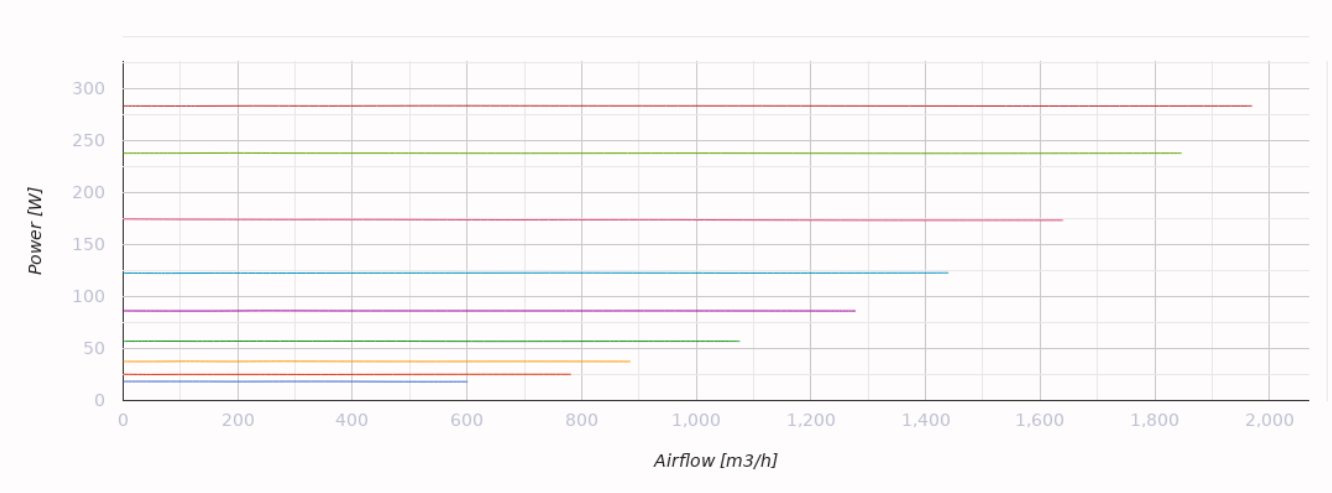
Power [W]
300
250
200
150
100
50
0
0
200
400
600
800
1,000
1,200
1,400
1,600
1,800
2,000
Airflow [m3/h]

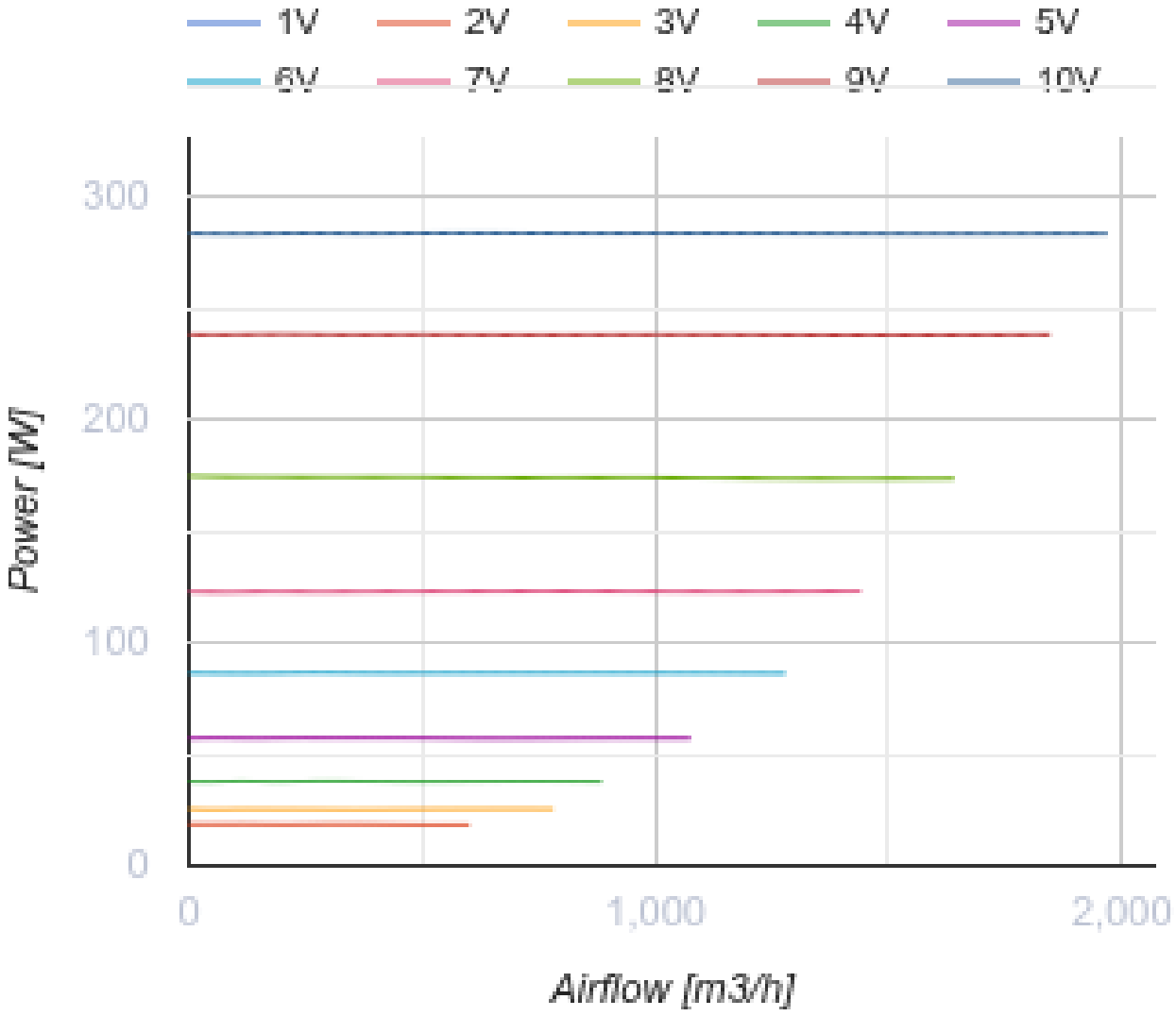
1V
2V
3V
4V
5V
6V
7V
8V
9V
10V
Power [W]
300
200
100
0
0
1,000
2,000
Airflow [m3/h]

Dimensions

ØD	H	L	L1	W	W1
313	434	785	180	526	450

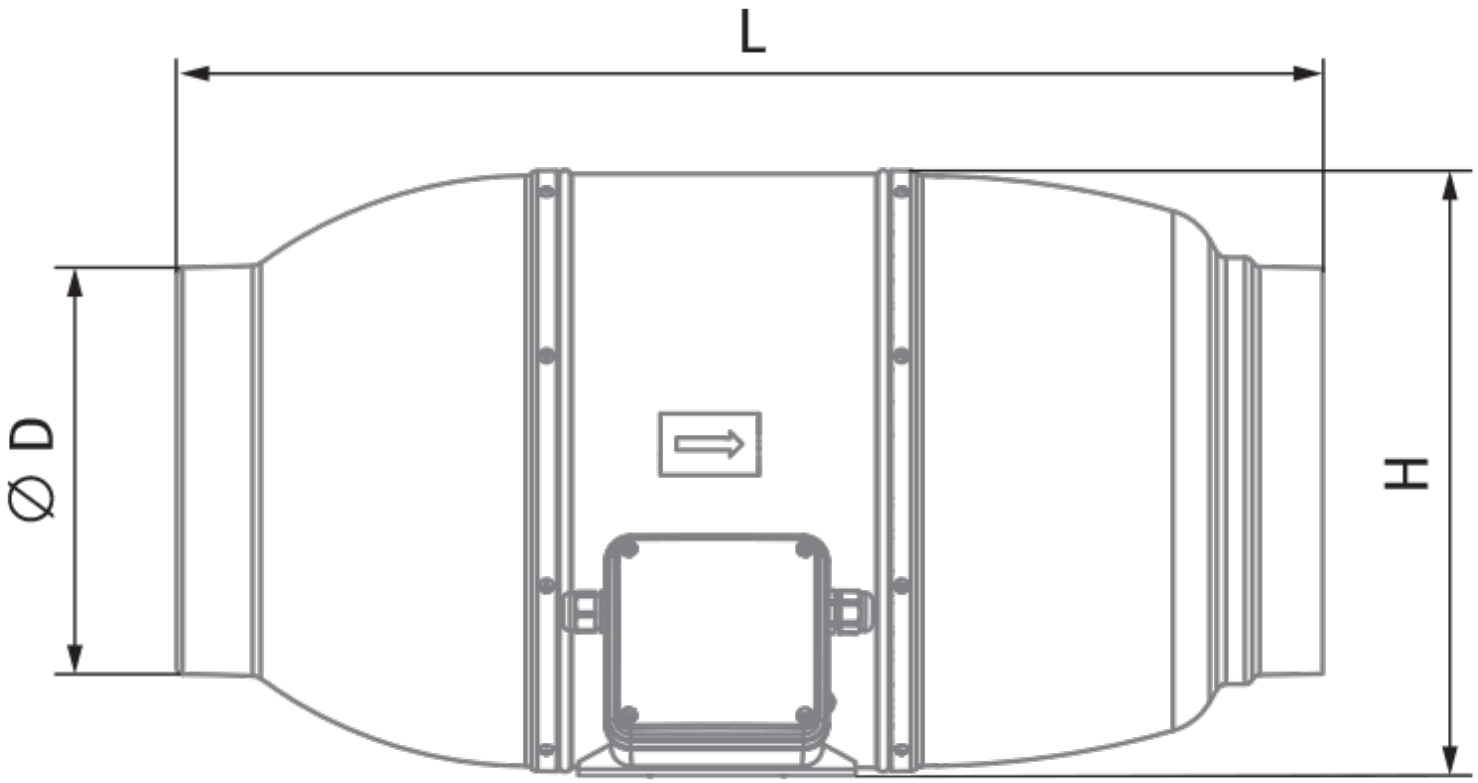

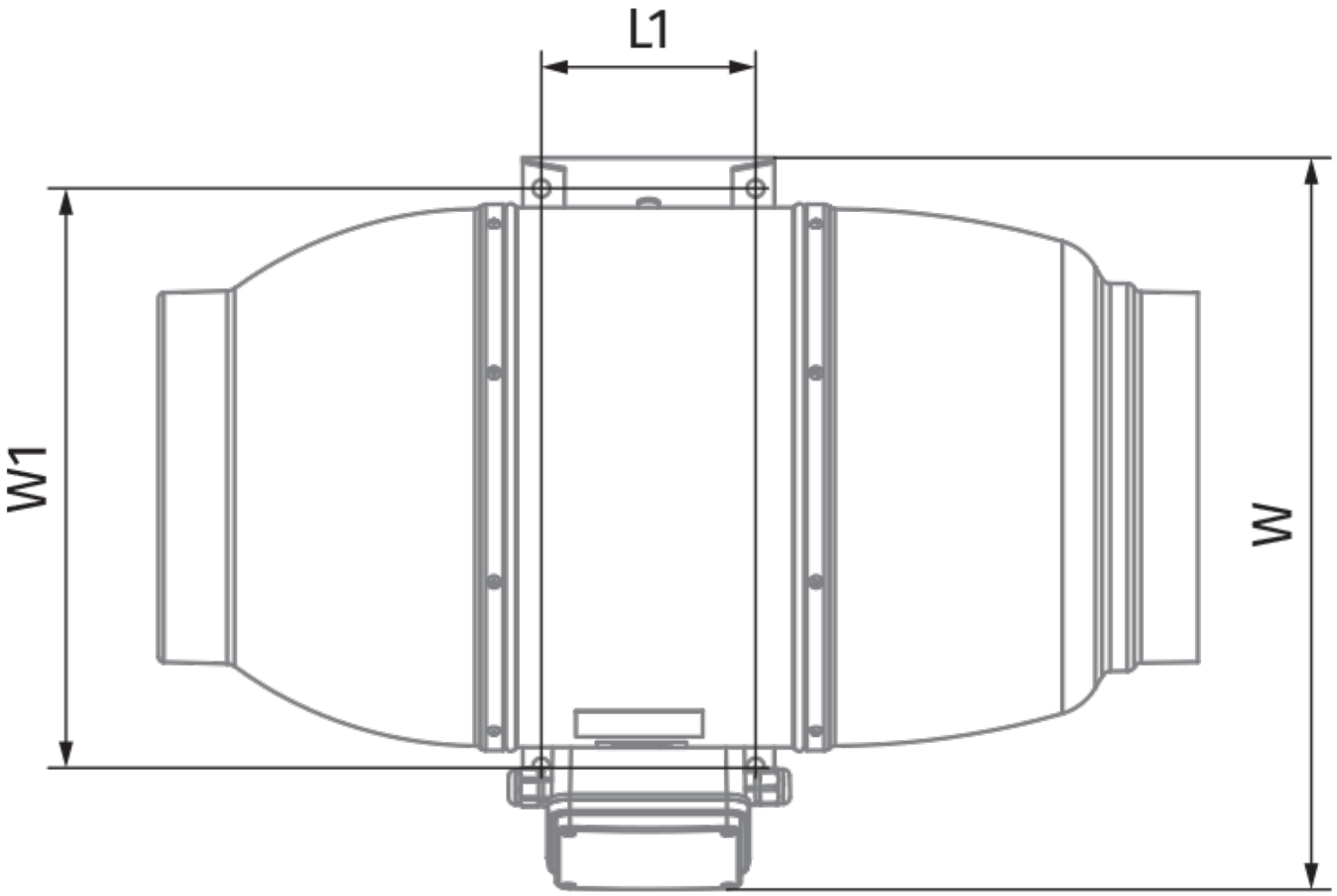
L1
W1
W

Ecodesign

Trademark	Blauberg
Model	Iso-Mix EC 315 GI1
Type of ventilation unit	Unidirectional
Type of drive installed	Integrated VSD
Type of heat recovery system	None
Nominal external pressure (Pa)	371
Maximum external leakage rates (%)	2.7
Static efficiency (%)	46.6
Declared typology	NRVU UVU
Effective electric power input (kW)	0.283
Sound power level (dB(A))	66

Accessories

EC motors regulators

Name	Photo	Description
CDT E/0-10		Speed control for EC motors