

Iso-Mix EC 250 G1

Mixed-flow inline fans in sound-insulated casings with EC-motors

- Sound-insulated casing
- Control: Built-in speed controller
- Impeller type: Mixed-flow
- Casing material: Coated steel
- Installation in any position
- Cable with mains plug
- Temperature sensor

	Unit of measurement	Iso-Mix EC 250 G1
Phases	-	1
Maximum supply voltage	V	230
Minimum supply voltage	V	230
Power supply frequency	Hz	50/60
Maximum airflow	m^3/h	1285
Weight	kg	12.5
Transported air temperature (max)	°C	55
Transported air temperature (min)	°C	-25
Ingress protection rating	-	IPX4
Impeller material	-	Plastic

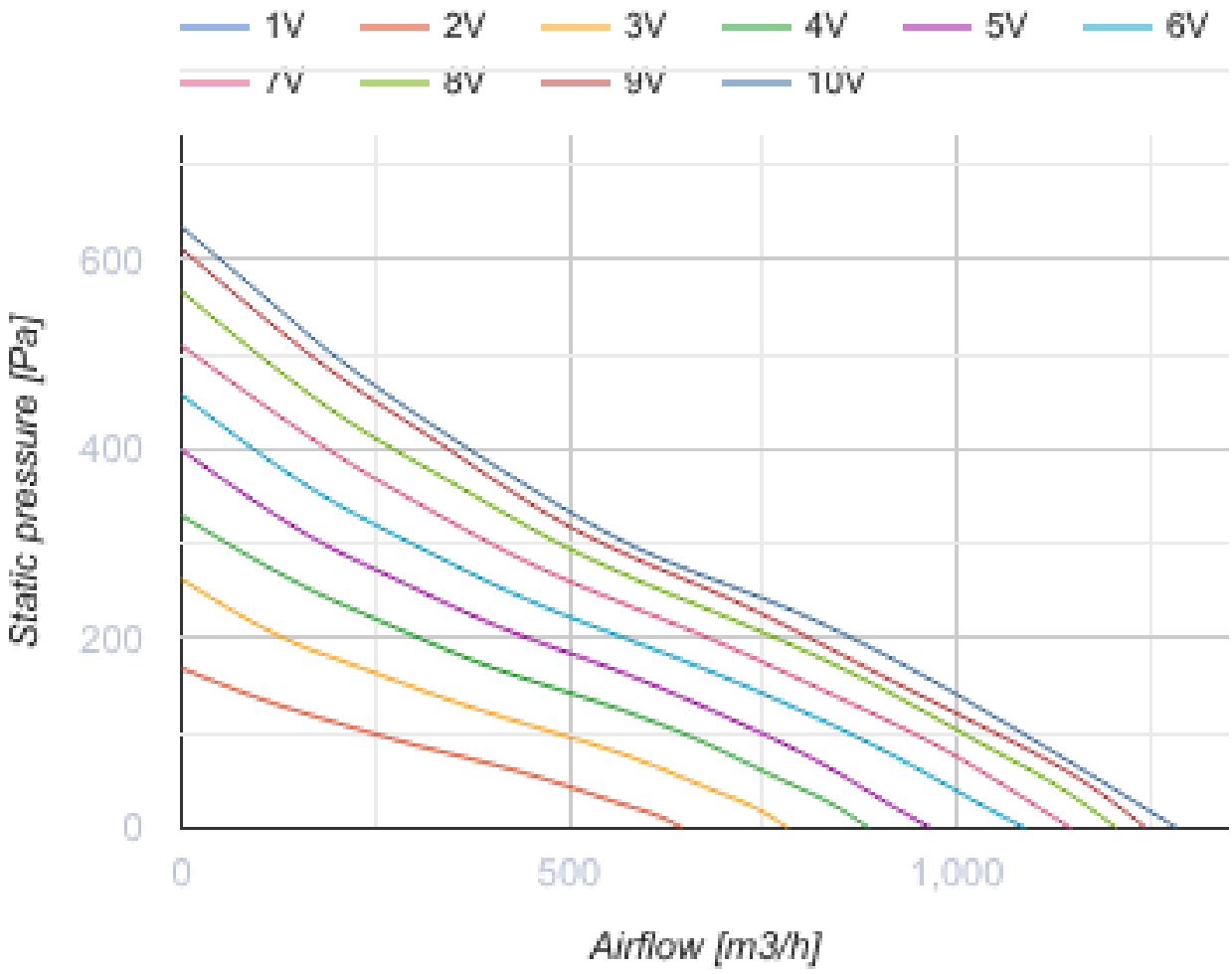
1V
2V
3V
4V
5V
6V
7V
8V
9V
10V
600
400
200
0
Static pressure [Pa]
0
500
1,000
Airflow [m3/h]

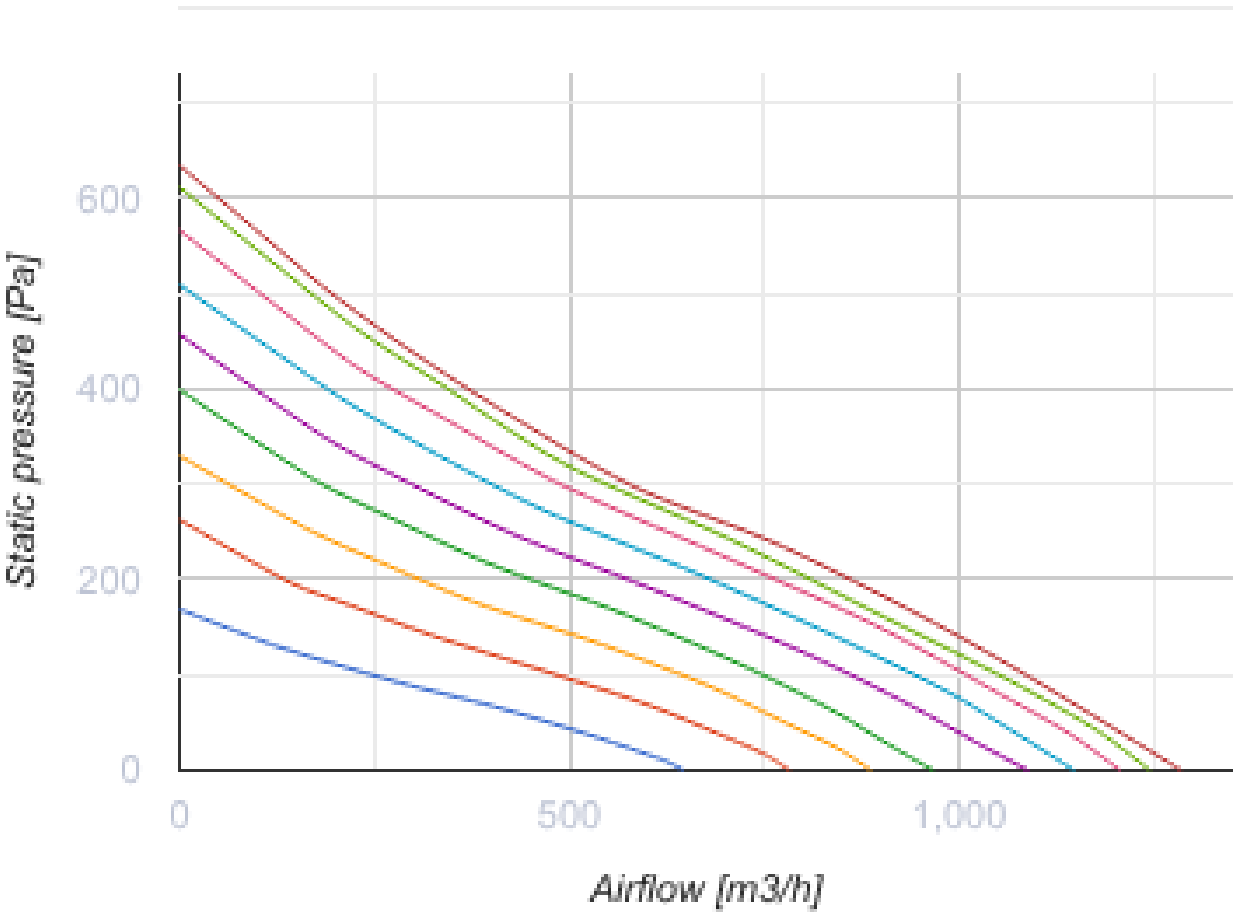
600
400
200
0
Static pressure [Pa]
0
500
1,000
Airflow [m3/h]

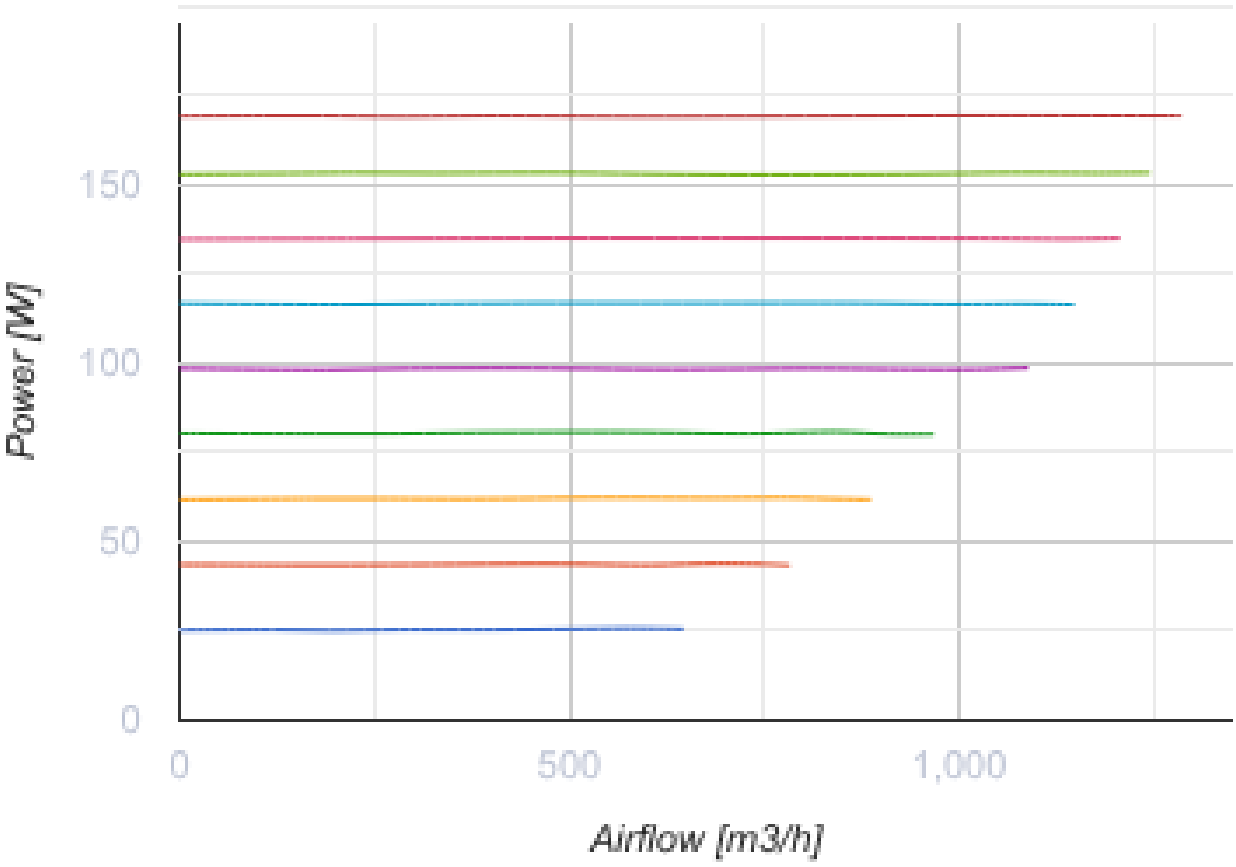
Power [W]
150
100
50
0
0
500
1,000
Airflow [m3/h]

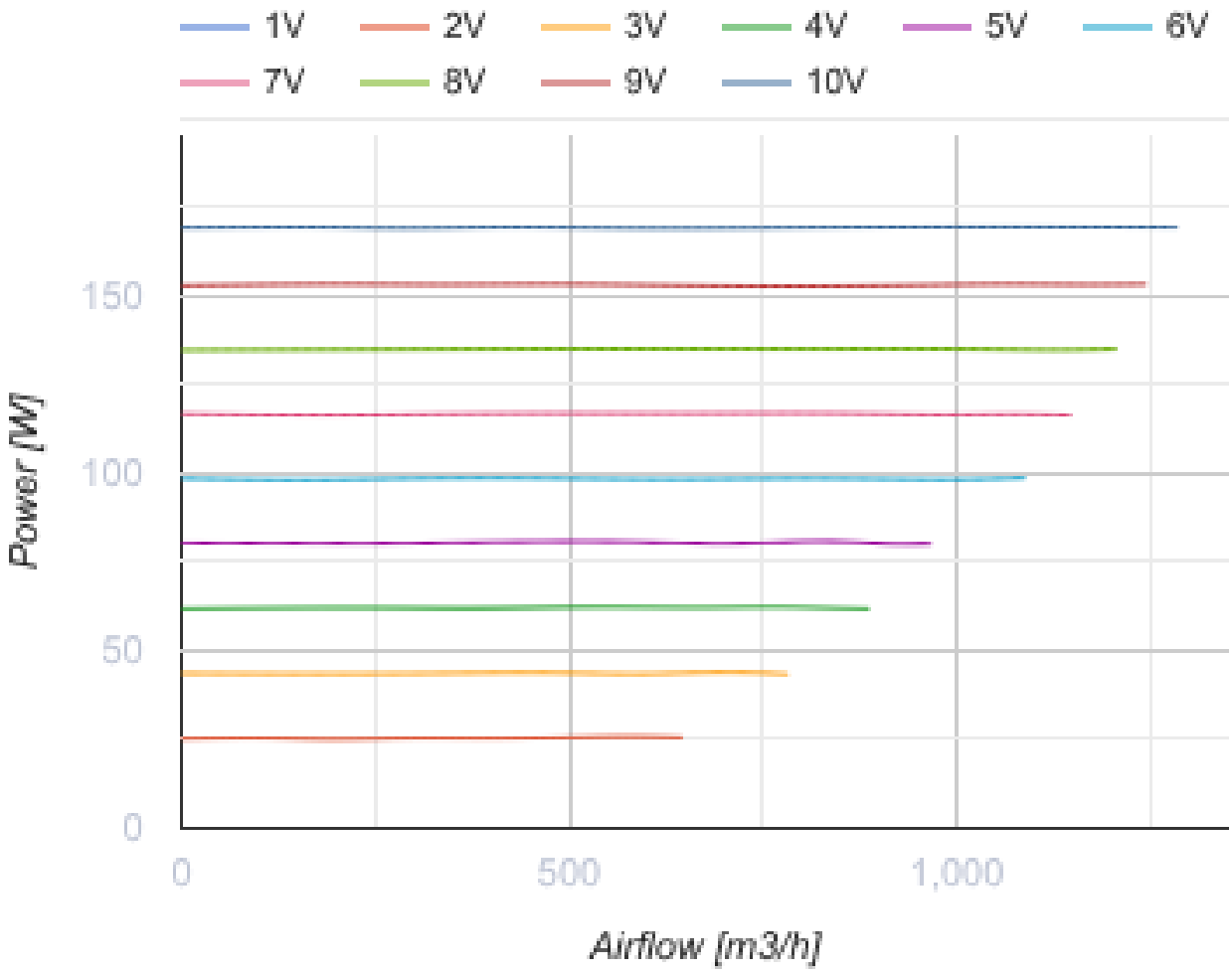

Dimensions

ØD	H	L	L1	W	W1
248	360	665	130	445	370

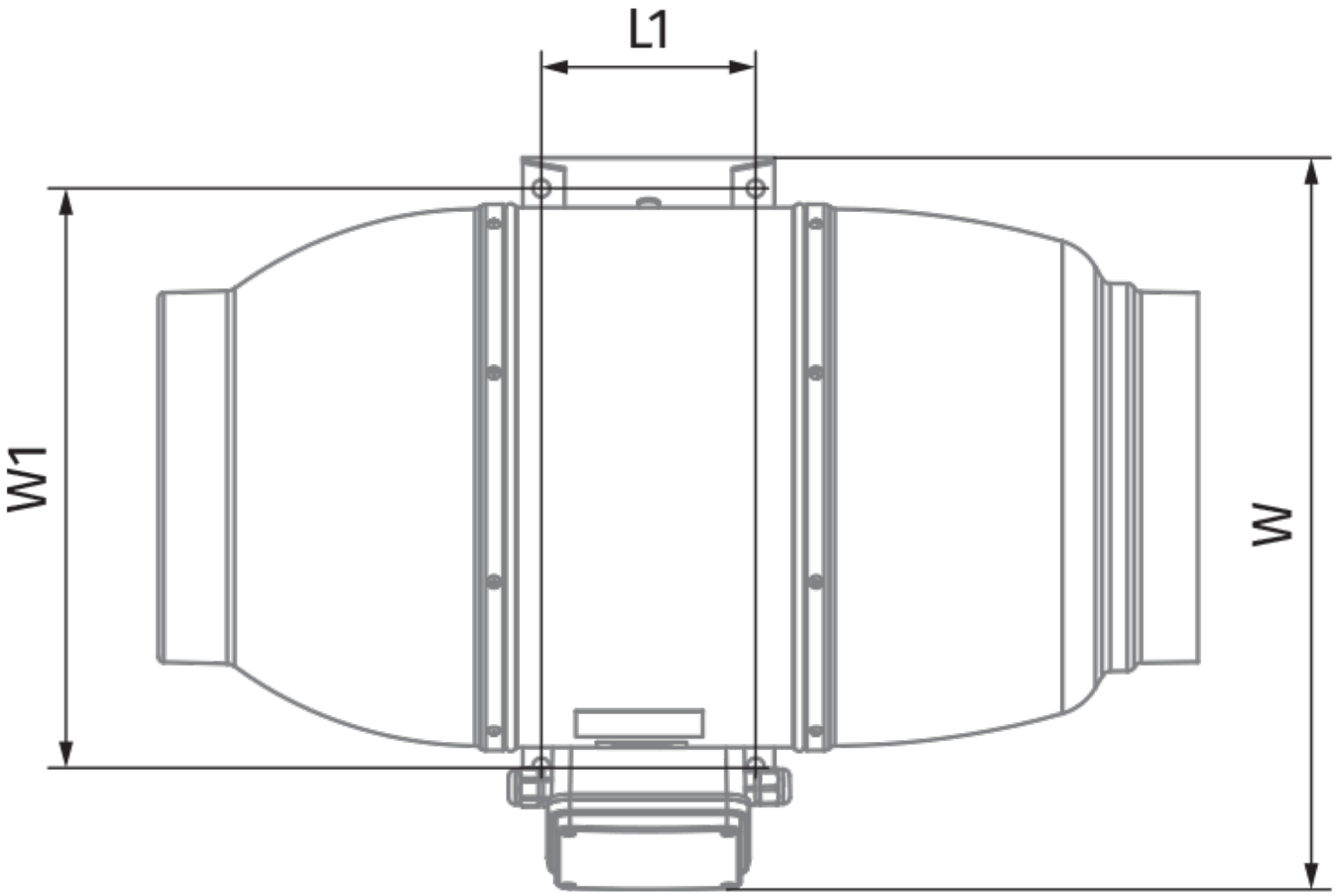
L1
W1
W

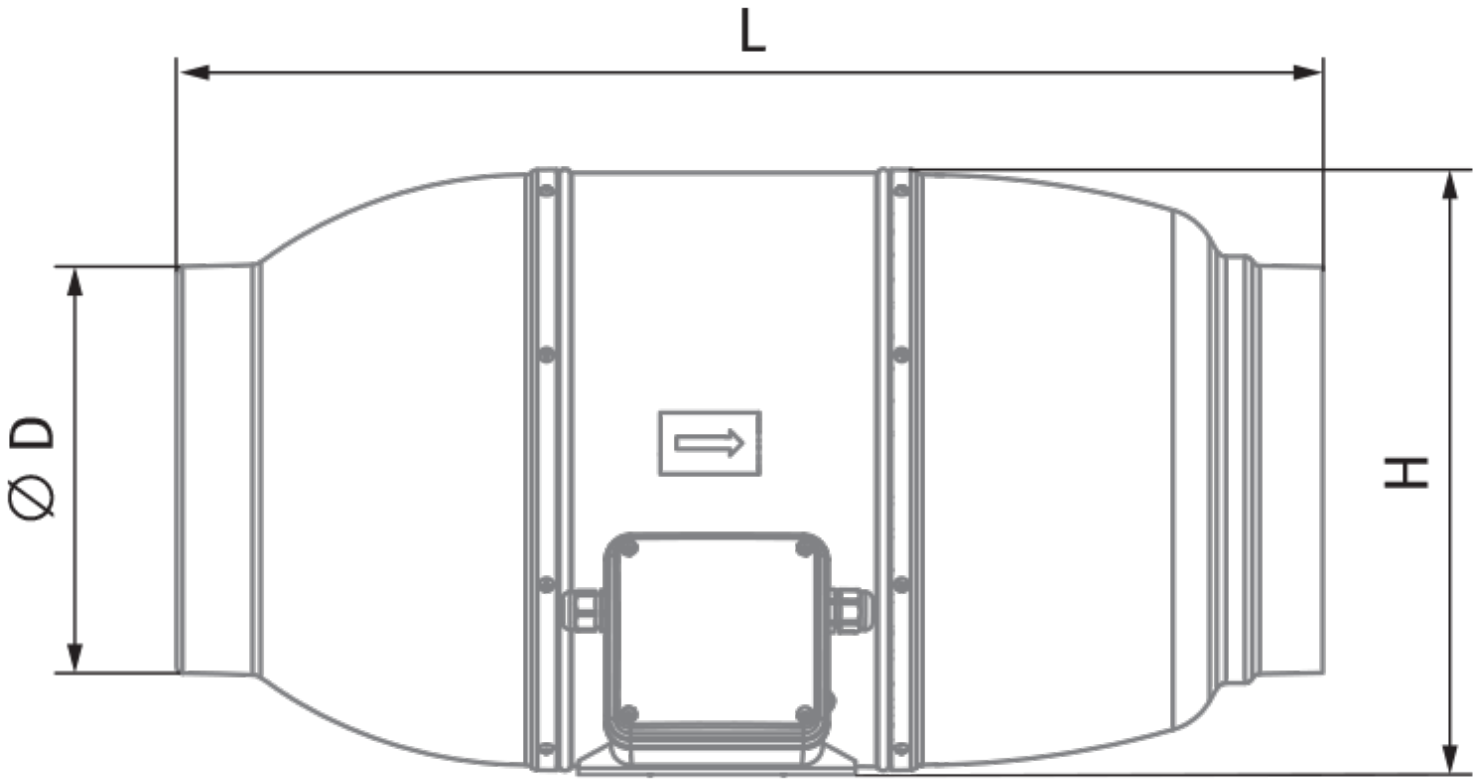
L
⌀ D
H

Ecodesign

Trademark	Blauberg
Model	Iso-Mix EC 250 G1
Type of ventilation unit	Unidirectional
Type of drive installed	Integrated VSD
Type of heat recovery system	None
Nominal external pressure (Pa)	234
Maximum external leakage rates (%)	2.7
Static efficiency (%)	34.8
Sound power level (dB(A))	62
Declared typology	NRVU UVU
Effective electric power input (kW)	0.169

Accessories

EC motors regulators

Name	Photo	Description
CDT E/0-10		Speed control for EC motors