

Iso-Mix EC 250

Mixed-flow inline fans in sound-insulated casings with EC-motors

- Sound-insulated casing
- Impeller type: Mixed-flow
- Casing material: Coated steel
- Installation in any position

	Unit of measurement	Iso-Mix EC 250
Phases	-	1
Minimum supply voltage	V	230
Maximum supply voltage	V	230
Power supply frequency	Hz	50/60
Maximum airflow	m^3/h	1285
Weight	kg	12.5
Transported air temperature (max)	°C	55
Transported air temperature (min)	°C	-25
Ingress protection rating	-	IPX4
Impeller material	-	Plastic

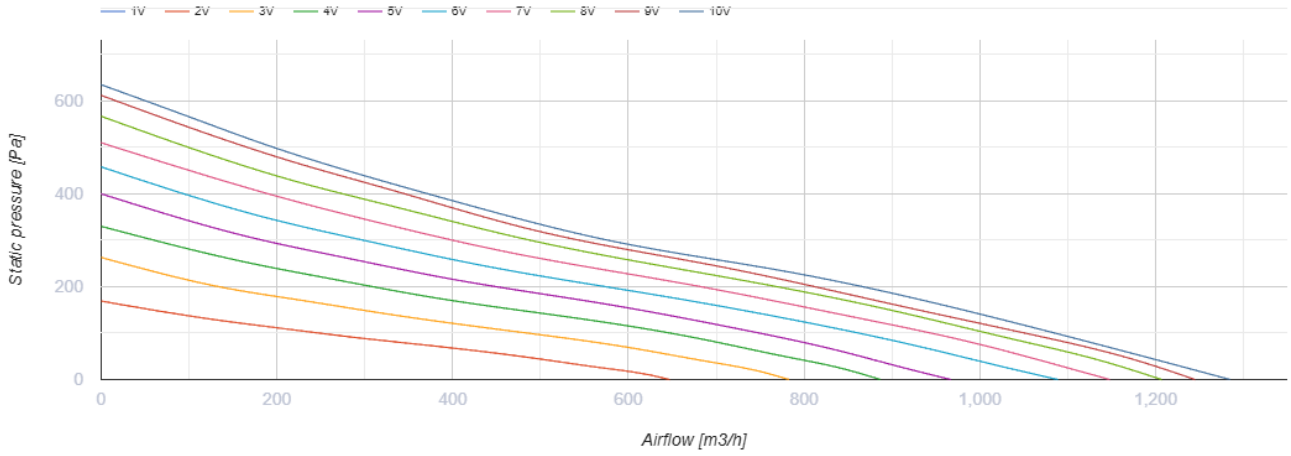

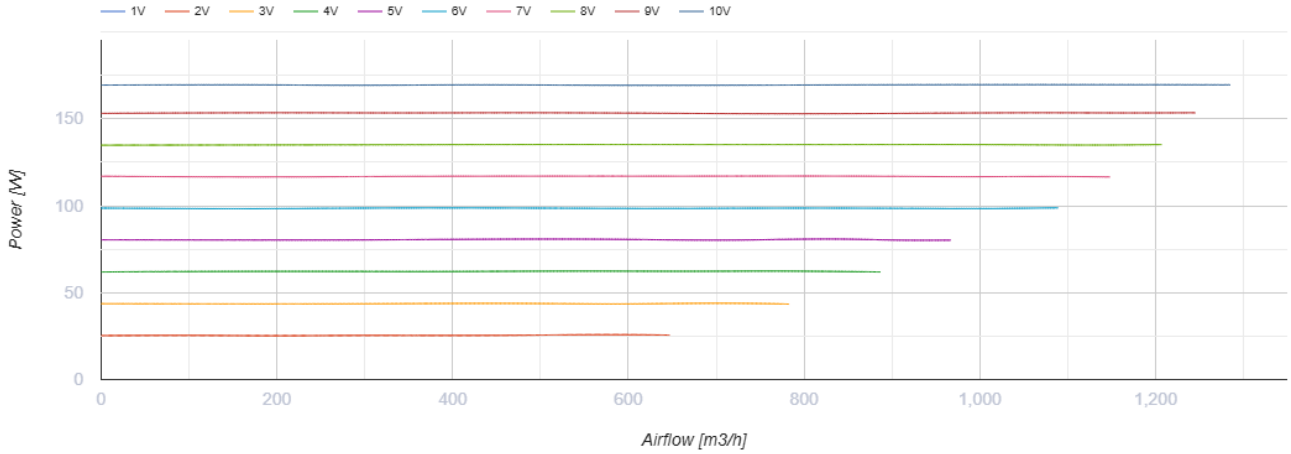

Dimensions

ØD	H	L	L1	W	W1
248	360	665	130	445	370

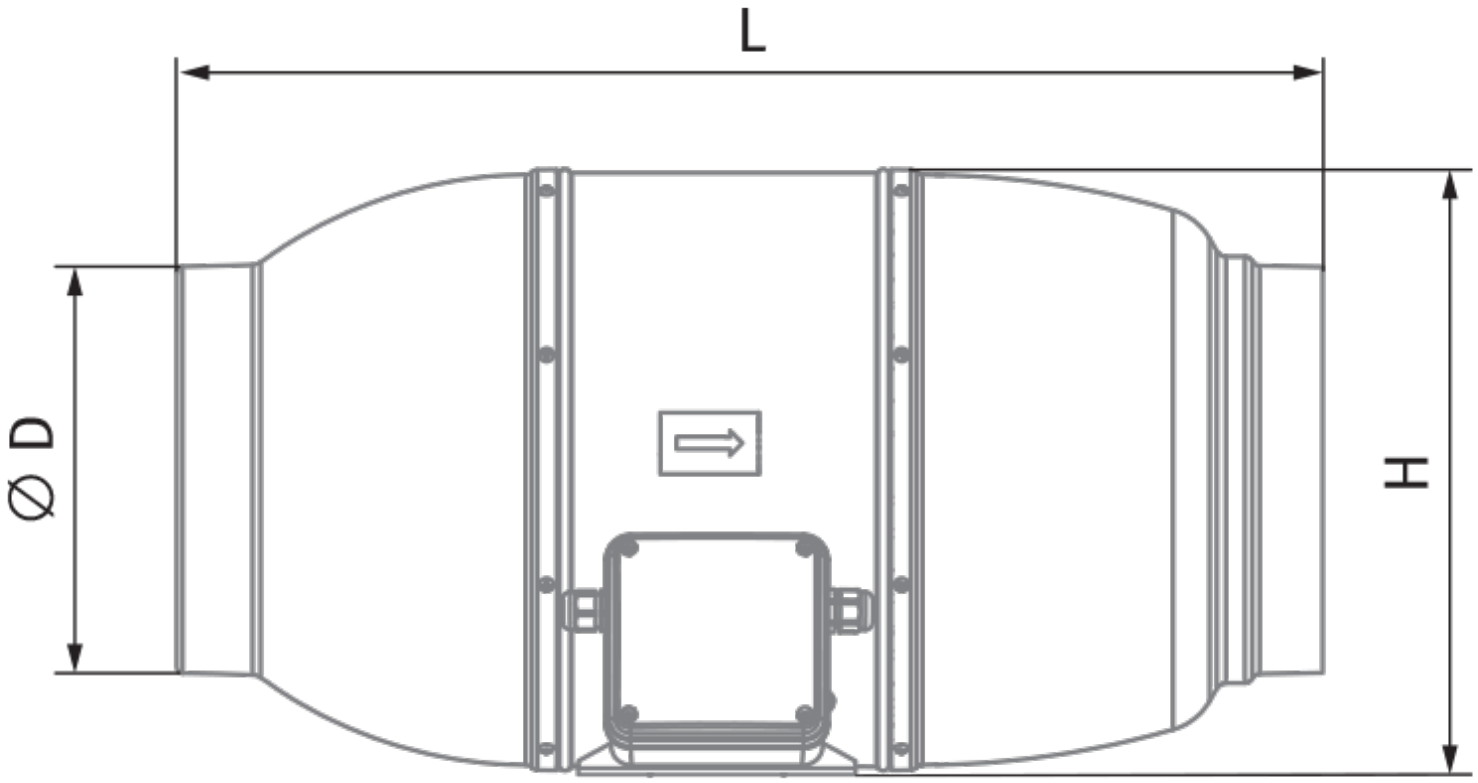
L
⌀ D
H

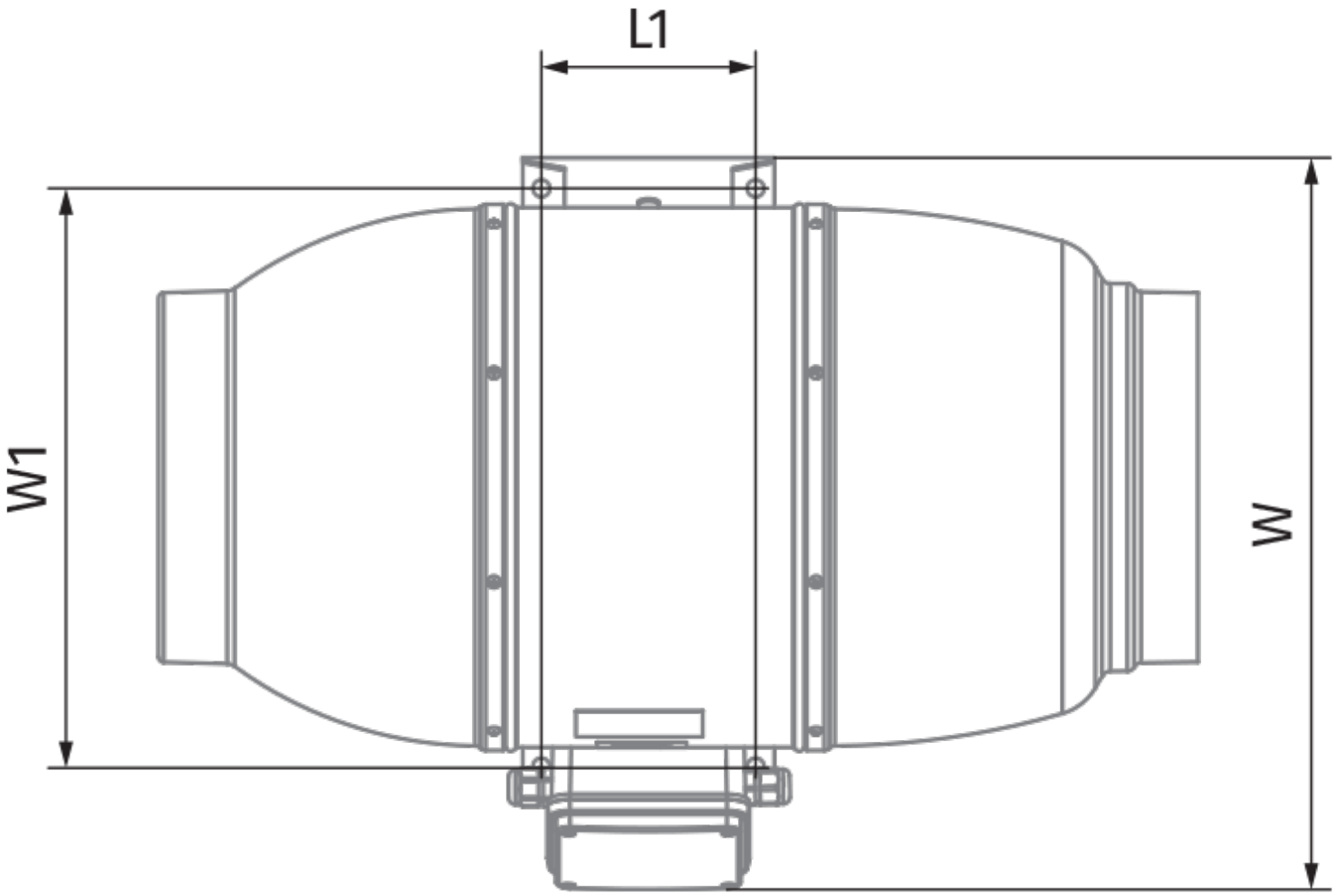
L1
W1
W

Ecodesign

Trademark	Blauberg
Model	Iso-Mix EC 250
Type of ventilation unit	Unidirectional
Type of drive installed	Integrated VSD
Type of heat recovery system	None
Nominal external pressure (Pa)	234
Maximum external leakage rates (%)	2.7
Static efficiency (%)	34.8
Declared typology	NRVU UVU
Sound power level (dB(A))	62
Effective electric power input (kW)	0.169

Accessories

EC motors regulators

Name	Photo	Description
CDT E/0-10		Speed control for EC motors