

Iso-Mix EC 200 G1

Mixed-flow inline fans in sound-insulated casings with EC-motors

- Sound-insulated casing
- Control: Built-in speed controller
- Impeller type: Mixed-flow
- Casing material: Coated steel
- Installation in any position
- Cable with mains plug
- Temperature sensor

	Unit of measurement	Iso-Mix EC 200 G1
Phases	-	1
Maximum supply voltage	V	230
Minimum supply voltage	V	230
Power supply frequency	Hz	50/60
Maximum airflow	m^3/h	1240
Weight	kg	8.6
Transported air temperature (max)	°C	55
Transported air temperature (min)	°C	-25
Ingress protection rating	-	IPX4
Impeller material	-	Plastic

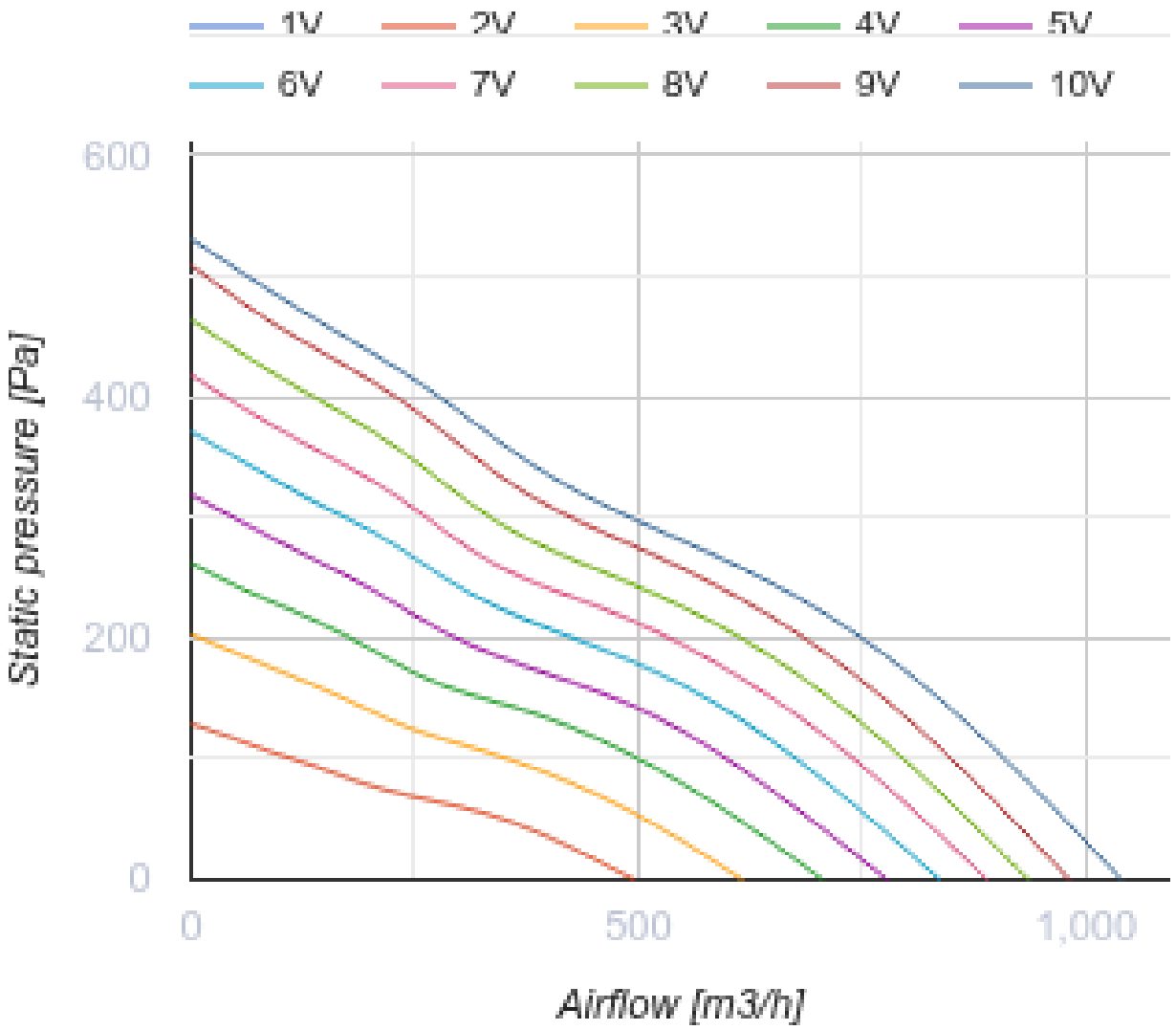
1V
2V
3V
4V
5V
6V
7V
8V
9V
10V
600
400
200
0
Static pressure [Pa]
0
500
1,000
Airflow [m3/h]

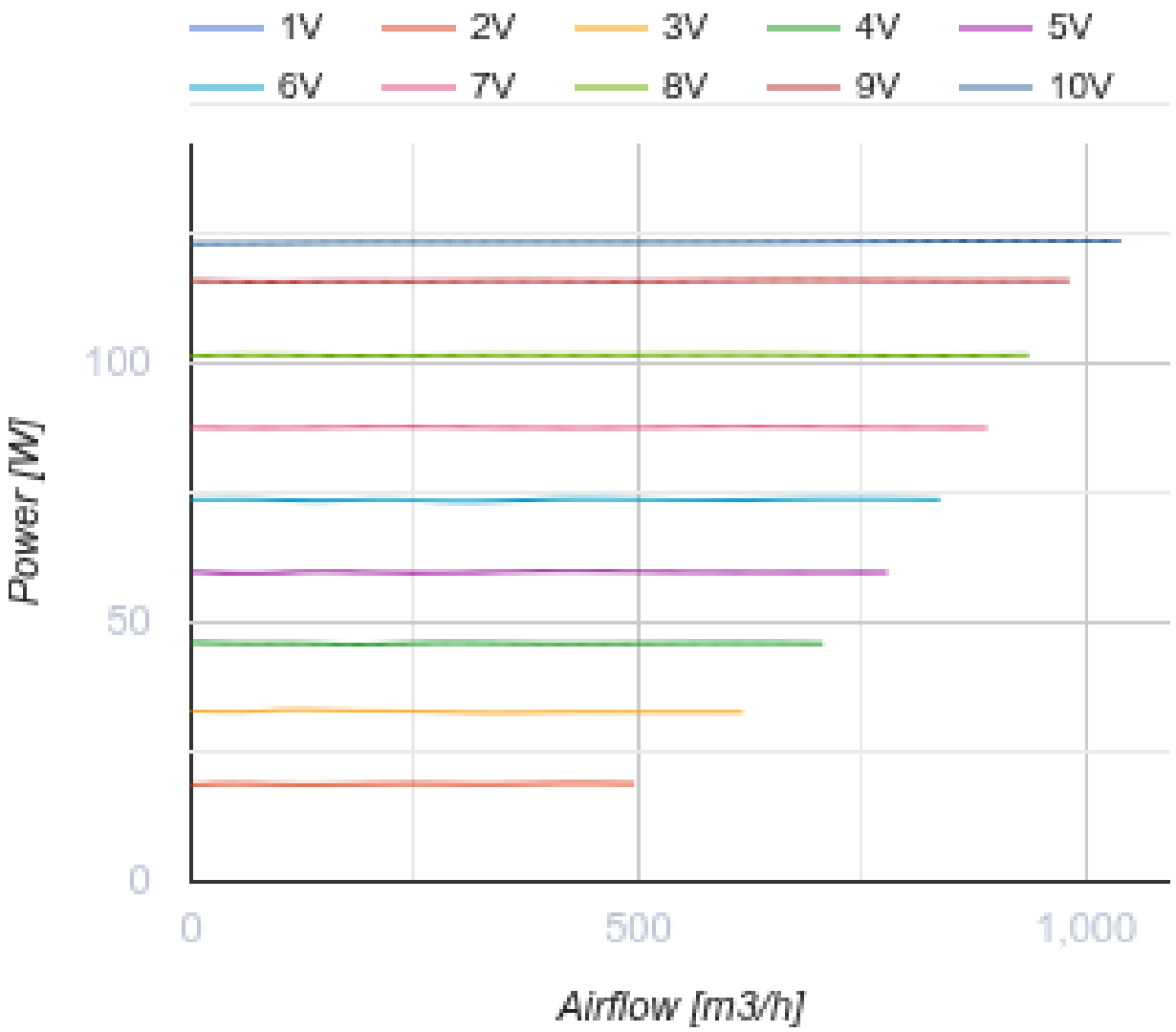

Dimensions

ØD	H	L	L1	W	W1
198	295	560	115	392	310

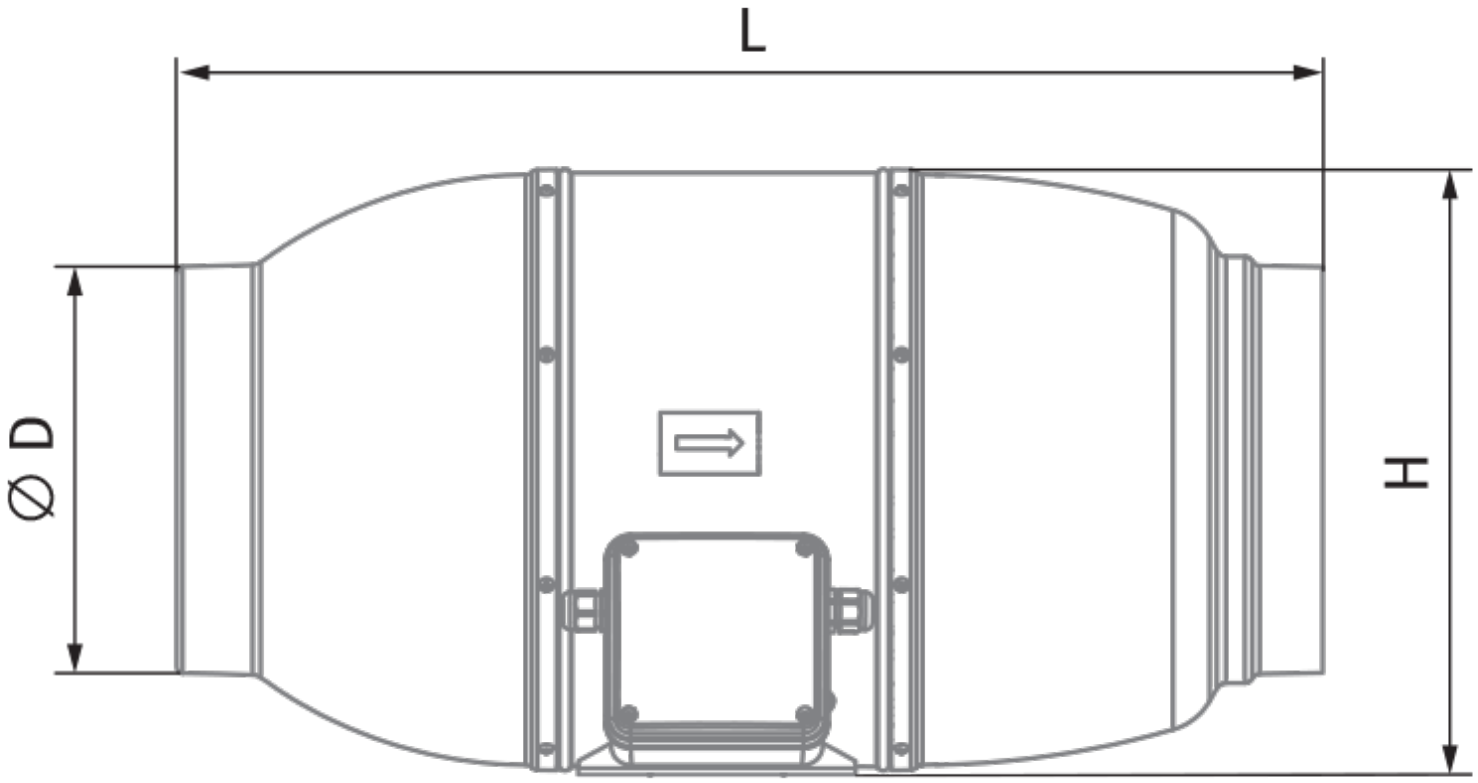
L
⌀ D
H

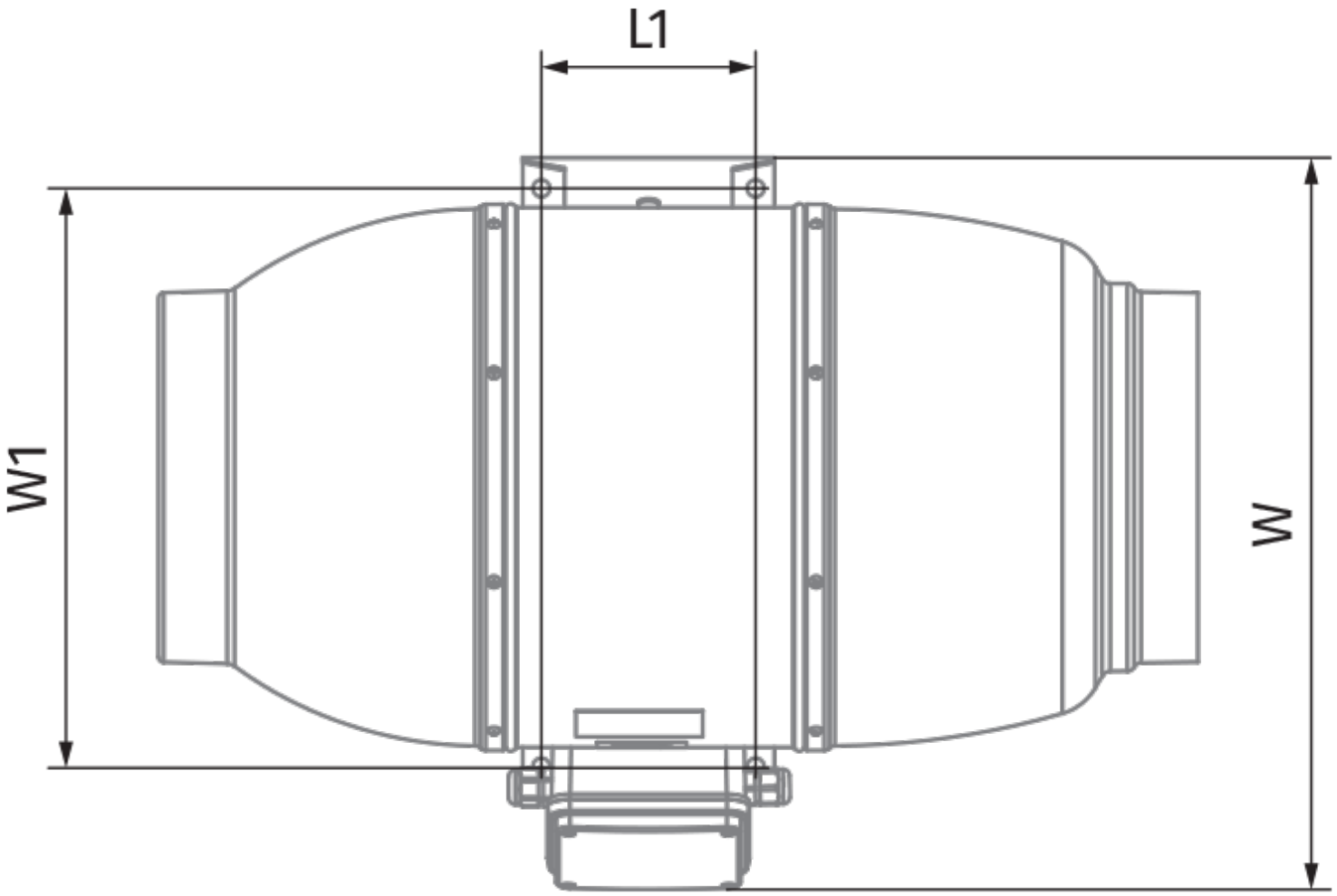
L1
W1
W

Ecodesign

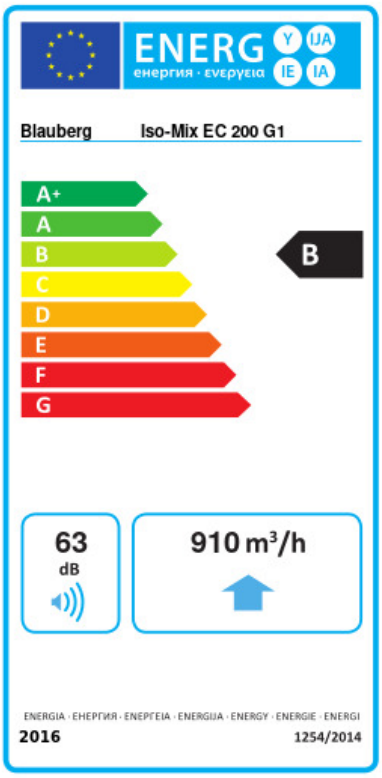

Trademark	Blauberg					
Model	Iso-Mix EC 200 G1					
Specific energy consumption (SEC) (kWh/(m²/a))	Cold		Average		Warm	
	-54.1	A+	-27.1	B	-11.6	E
Type of ventilation unit	Unidirectional					
Type of drive installed	Variable speed					
Type of heat recovery system	None					
Maximum flow rate (m³/h)	910					
Electric power input (W)	123					
Reference flow rate (m³/s)	0.177					
Reference pressure difference (Pa)	50					
Specific power input (SPI) (W/(m³/h))	0.094					
Control typology	Local demand control					
Maximum external leakage rates (%)	2.7					
Declared typology	RVU UVU					
Sound power level (dB(A))	63					
The annual electricity consumption (AEC) (kWh/a)	Cold		Average		Warm	
	50		50		50	
The annual heating saved (AHS) (kWh/a)	Cold		Average		Warm	
	5536		2830		1280	

Accessories

EC motors regulators

Name	Photo	Description
CDT E/0-10		Speed control for EC motors