

# Iso-Mix EC 160

Mixed-flow inline fans in sound-insulated casings with EC-motors

- Sound-insulated casing
- Impeller type: Mixed-flow
- Casing material: Coated steel
- Installation in any position

| | Unit of measurement | Iso-Mix EC 160 |
|---|---|---|
| Phases | - | 1 |
| Minimum supply voltage | V | 230 |
| Maximum supply voltage | V | 230 |
| Power supply frequency | Hz | 50/60 |
| Maximum airflow | $m^3/h$ | 600 |
| Weight | kg | 6 |
| Transported air temperature (max) | °C | 55 |
| Transported air temperature (min) | °C | -25 |
| Ingress protection rating | - | IPX4 |
| Impeller material | - | Plastic |

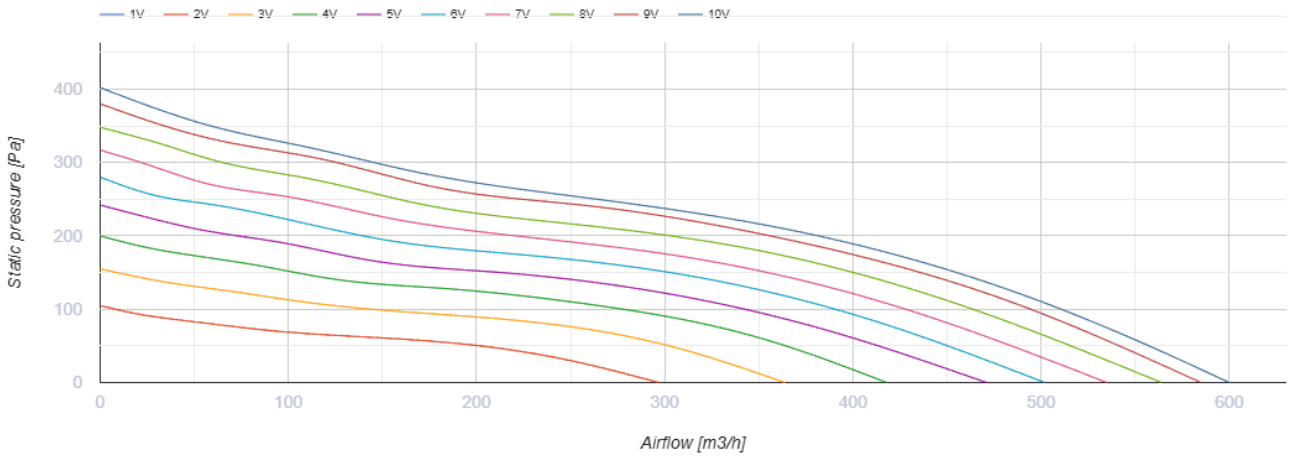


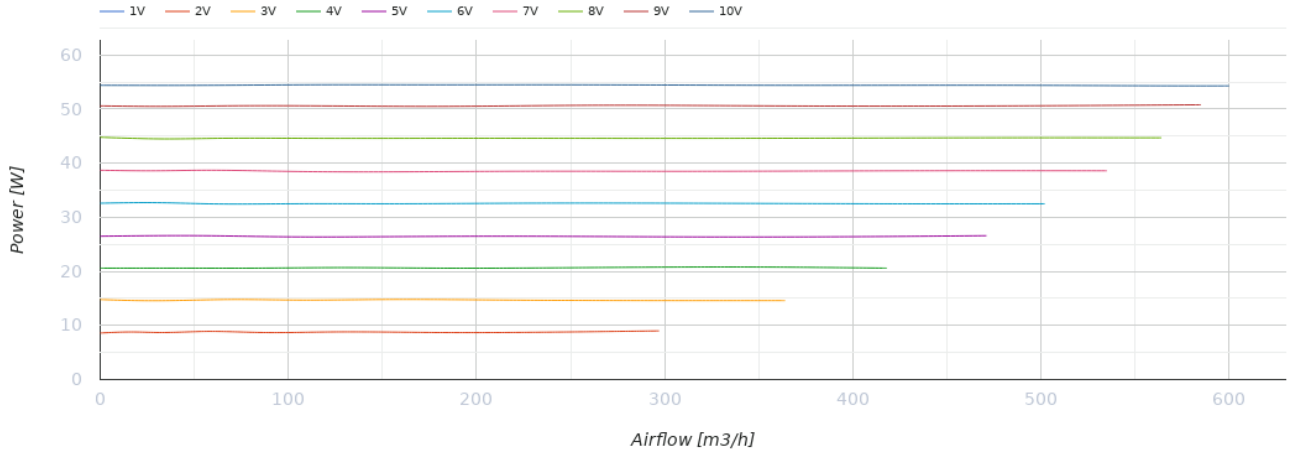


## Dimensions

| ØD | H | L | L1 | W | W1 |
|---|---|---|---|---|---|
| 157 | 263 | 580 | 44 | 273 | 231 |

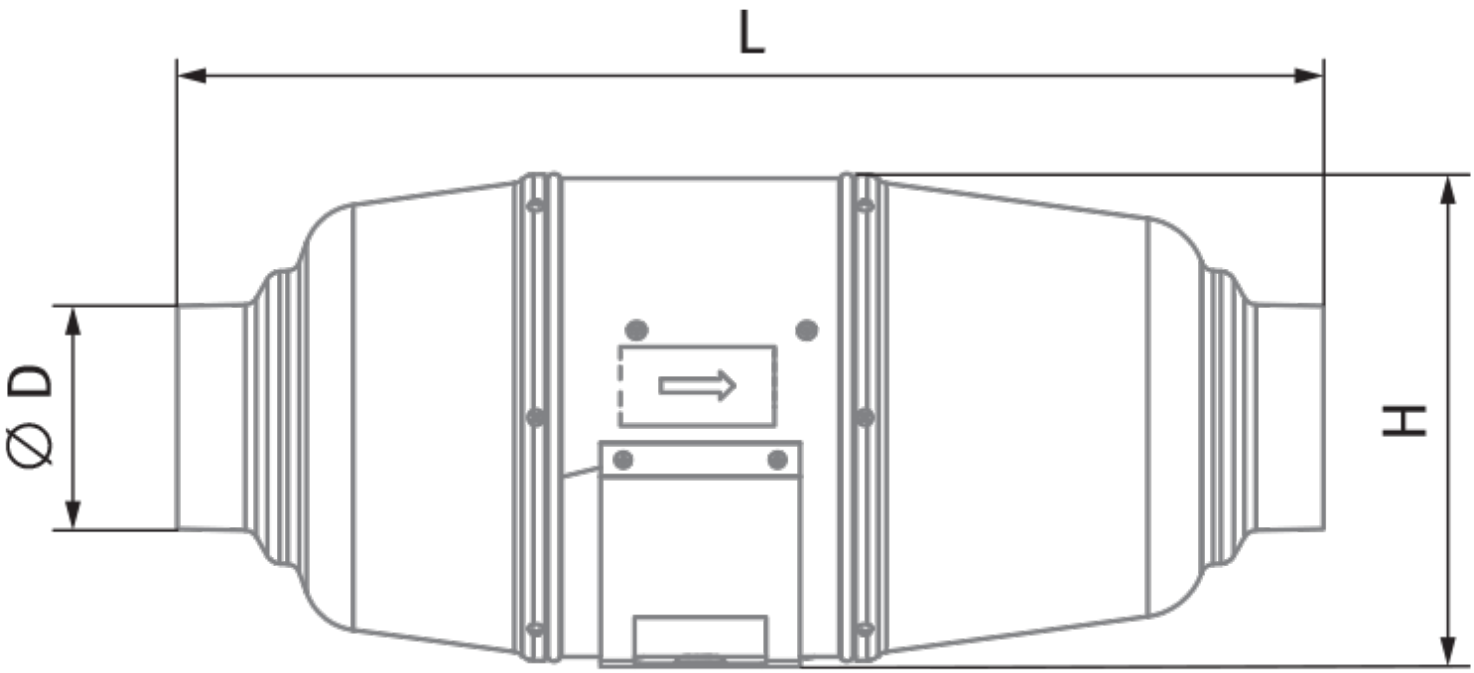
L
⌀ D
H

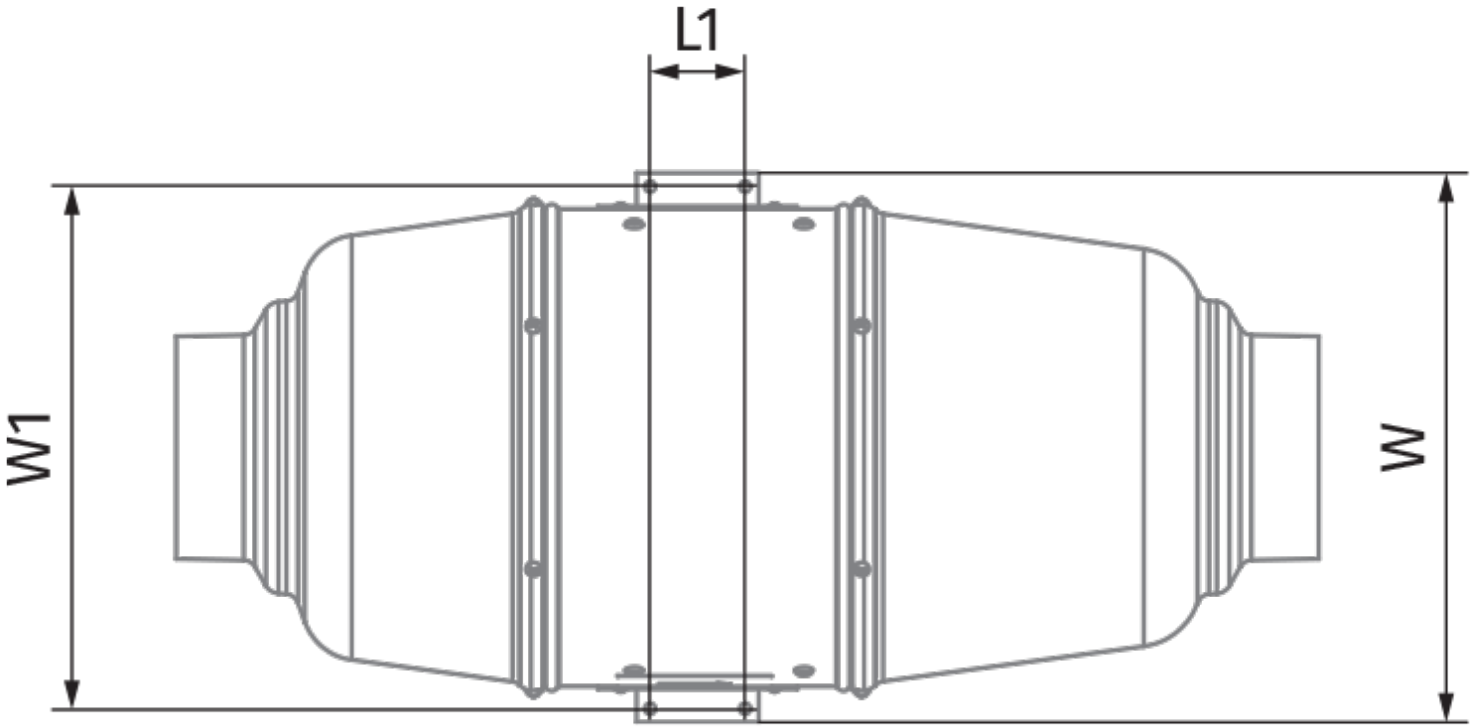
L1
W1
W

## Ecodesign

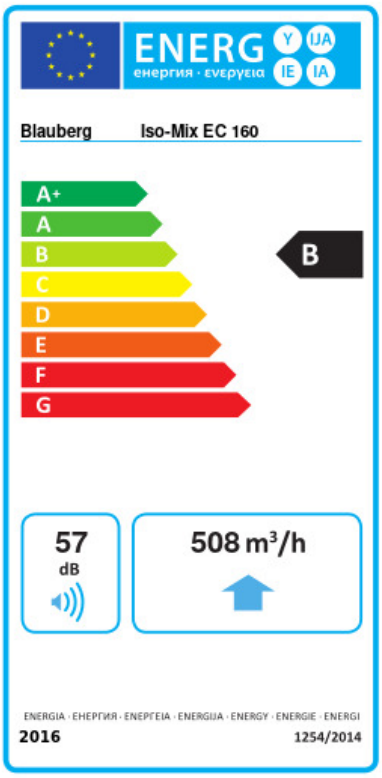


| Trademark | Blauberg | | | | | |
|---|---|---|---|---|---|---|
| Model | Iso-Mix EC 160 | | | | | |
| Specific energy consumption (SEC) (kWh/(m²/a)) | Cold | | Average | | Warm | |
| | -54.6 | A+ | -27.5 | B | -12 | E |
| Type of ventilation unit | Unidirectional | | | | | |
| Type of drive installed | Variable speed | | | | | |
| Type of heat recovery system | None | | | | | |
| Maximum flow rate (m³/h) | 508 | | | | | |
| Electric power input (W) | 54.3 | | | | | |
| Reference flow rate (m³/s) | 0.099 | | | | | |
| Reference pressure difference (Pa) | 50 | | | | | |
| Specific power input (SPI) (W/(m³/h)) | 0.058 | | | | | |
| Control typology | Local demand control | | | | | |
| Maximum external leakage rates (%) | 2.7 | | | | | |
| Declared typology | RVU UVU | | | | | |
| Sound power level (dB(A)) | 57 | | | | | |
| The annual electricity consumption (AEC) (kWh/a) | Cold | | Average | | Warm | |
| | 31 | | 31 | | 31 | |
| The annual heating saved (AHS) (kWh/a) | Cold | | Average | | Warm | |
| | 5536 | | 2830 | | 1280 | |

## Accessories

### EC motors regulators

| Name | Photo | Description |
|---|---|---|
| CDT E/0-10 |  | Speed control for EC motors |