

Iso-Mix EC 125

Mixed-flow inline fans in sound-insulated casings with EC-motors

- Sound-insulated casing
- Impeller type: Mixed-flow
- Casing material: Coated steel
- Installation in any position

	Unit of measurement	Iso-Mix EC 125
Phases	-	1
Minimum supply voltage	V	230
Maximum supply voltage	V	230
Power supply frequency	Hz	50/60
Maximum airflow	m^3/h	370
Weight	kg	4.8
Transported air temperature (max)	°C	55
Transported air temperature (min)	°C	-25
Ingress protection rating	-	IPX4
Impeller material	-	Plastic

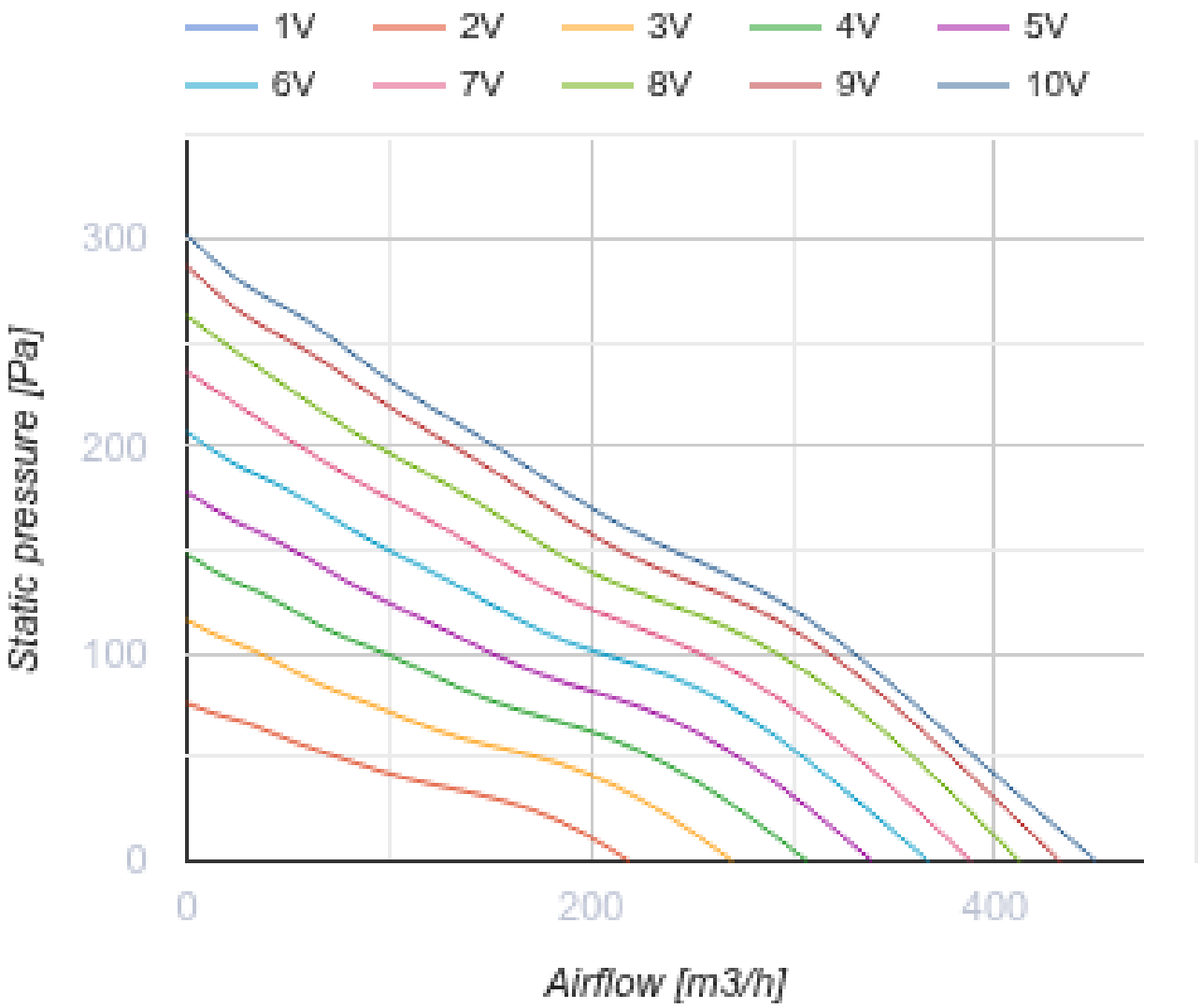
1V
2V
3V
4V
5V
6V
7V
8V
9V
10V
300
200
100
0
Static pressure [Pa]
0
200
400
Airflow [m3/h]

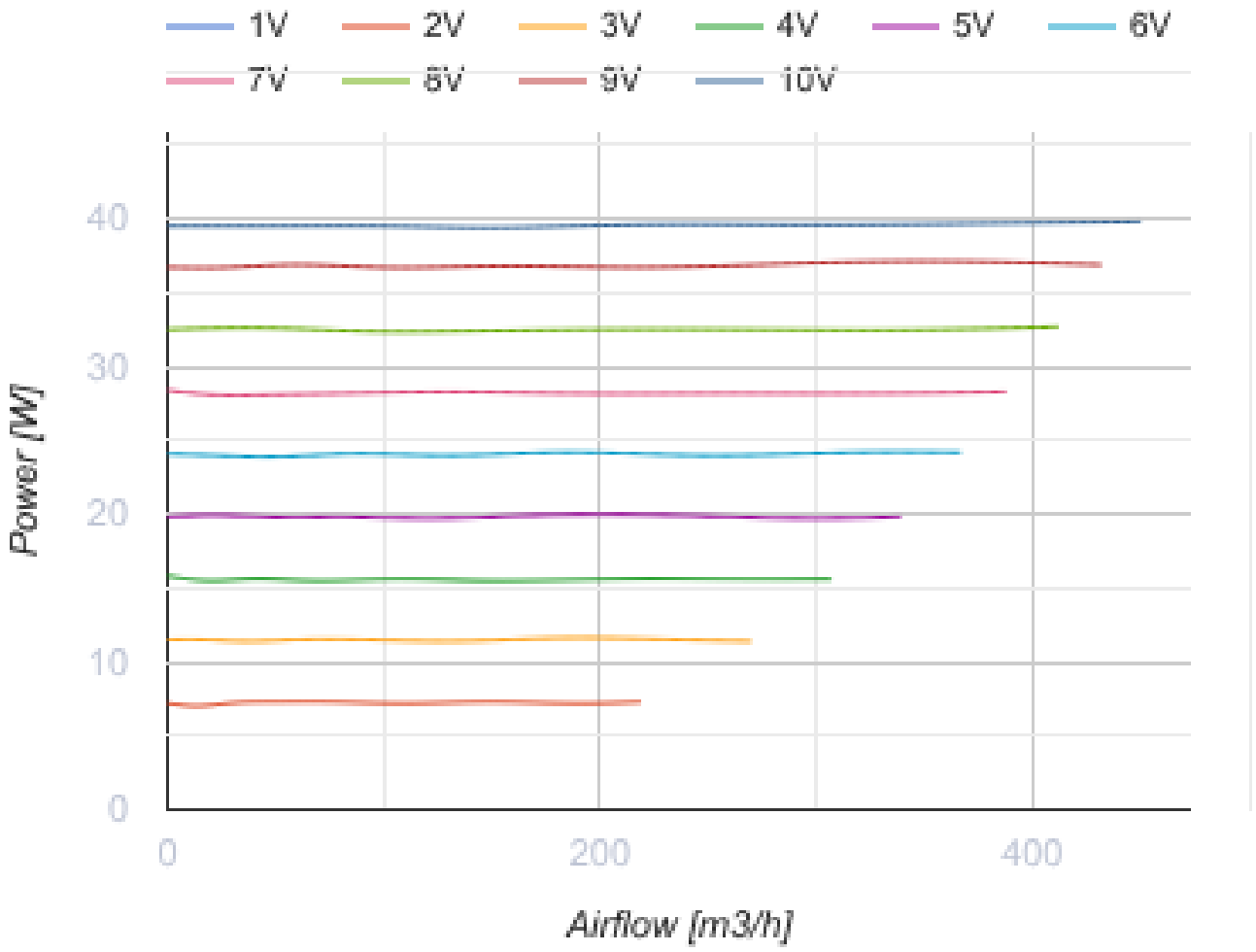

Dimensions

ØD	H	L	L1	W	W1
123	220	474	42	243	231

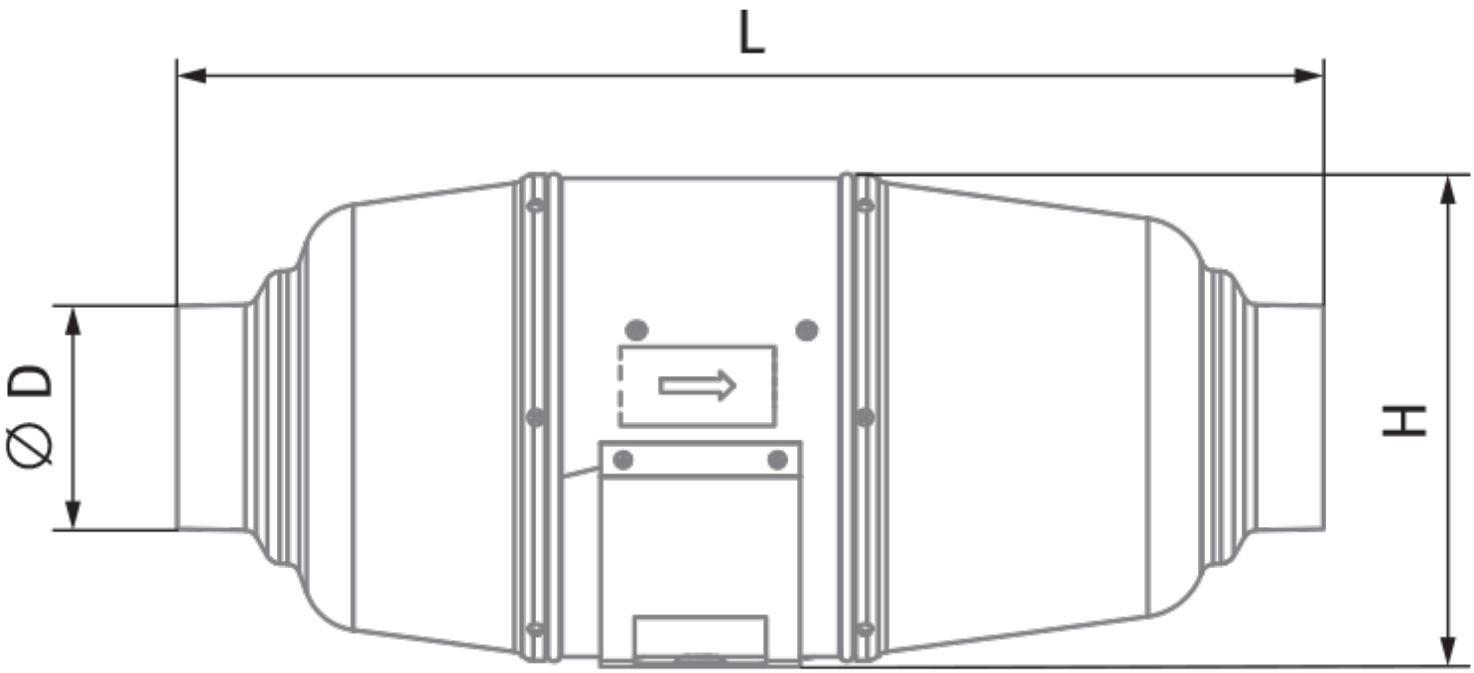
L
⌀ D
H

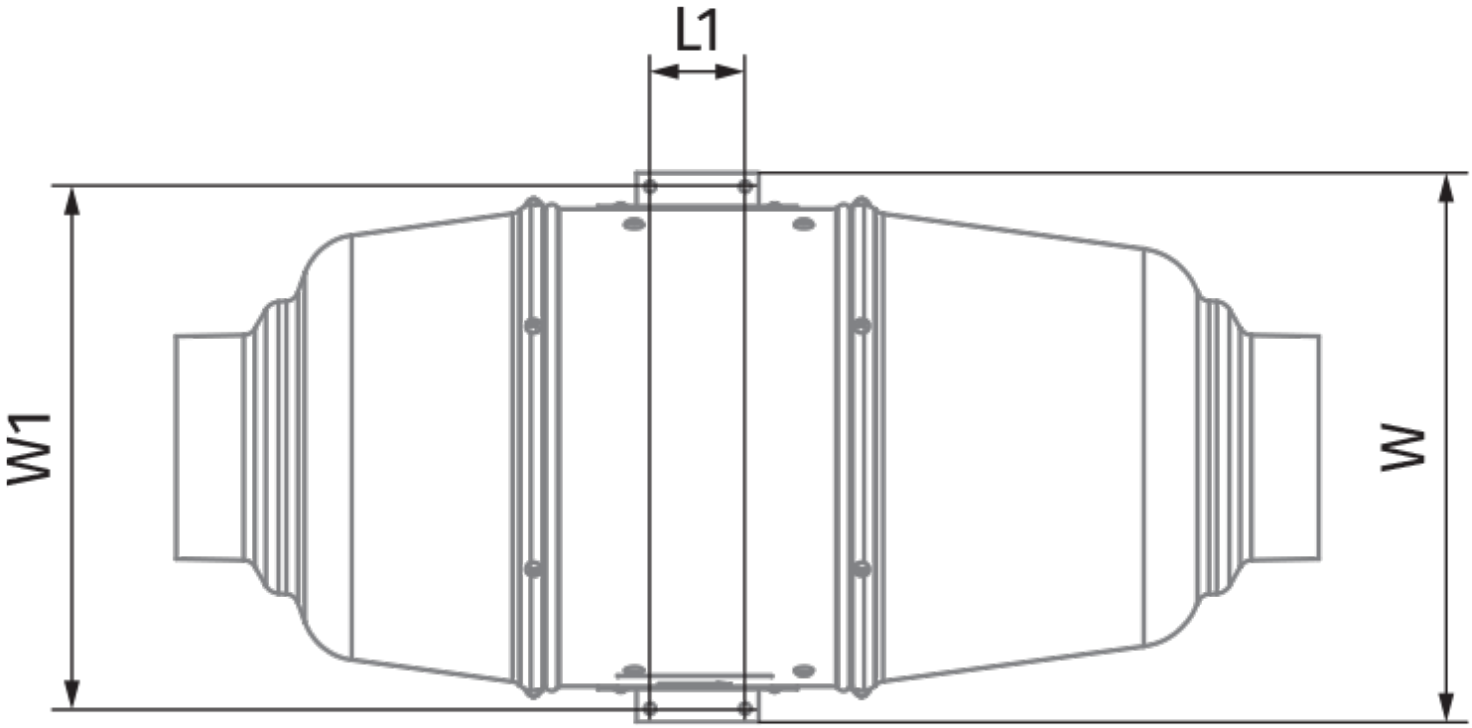
L1
W1
W

Ecodesign

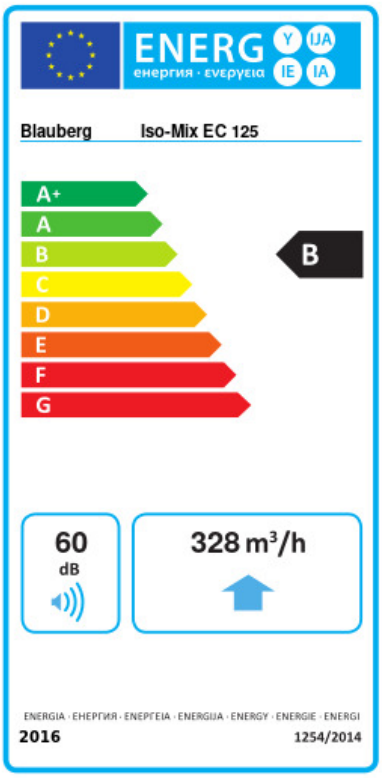

Trademark	Blauberg					
Model	Iso-Mix EC 125					
Specific energy consumption (SEC) (kWh/(m²/a))	Cold		Average		Warm	
	-54.5	A+	-27.4	B	-11.9	E
Type of ventilation unit	Unidirectional					
Type of drive installed	Variable speed					
Type of heat recovery system	None					
Maximum flow rate (m³/h)	328					
Electric power input (W)	39.8					
Reference flow rate (m³/s)	0.064					
Reference pressure difference (Pa)	50					
Specific power input (SPI) (W/(m³/h))	0.068					
Control typology	Local demand control					
Maximum external leakage rates (%)	2.7					
Sound power level (dB(A))	60					
Declared typology	RVU UVU					
The annual electricity consumption (AEC) (kWh/a)	Cold		Average		Warm	
	36		36		36	
The annual heating saved (AHS) (kWh/a)	Cold		Average		Warm	
	5536		2830		1280	

Accessories

EC motors regulators

Name	Photo	Description
CDT E/0-10		Speed control for EC motors