

Iso-Mix 250 USW1

Mixed-flow inline fans in sound-insulated casings

- Sound-insulated casing
- Control: Built-in speed controller
- Impeller type: Mixed-flow
- Casing material: Coated steel
- Installation in any position
- Cable with mains plug

	Unit of measurement	Iso-Mix 250 USW1	
Speed	-	1	2
Phases	-	1	
Maximum supply voltage	V	230	
Minimum supply voltage	V	230	
Power supply frequency	Hz	50/60	
Maximum airflow	m³/h	1035	1315
Weight	kg	15	
Transported air temperature (max)	°C	60	
Ingress protection rating	-	IPX4	
Ingress protection rating of the drive	-	IP44	
Impeller material	-	Plastic	

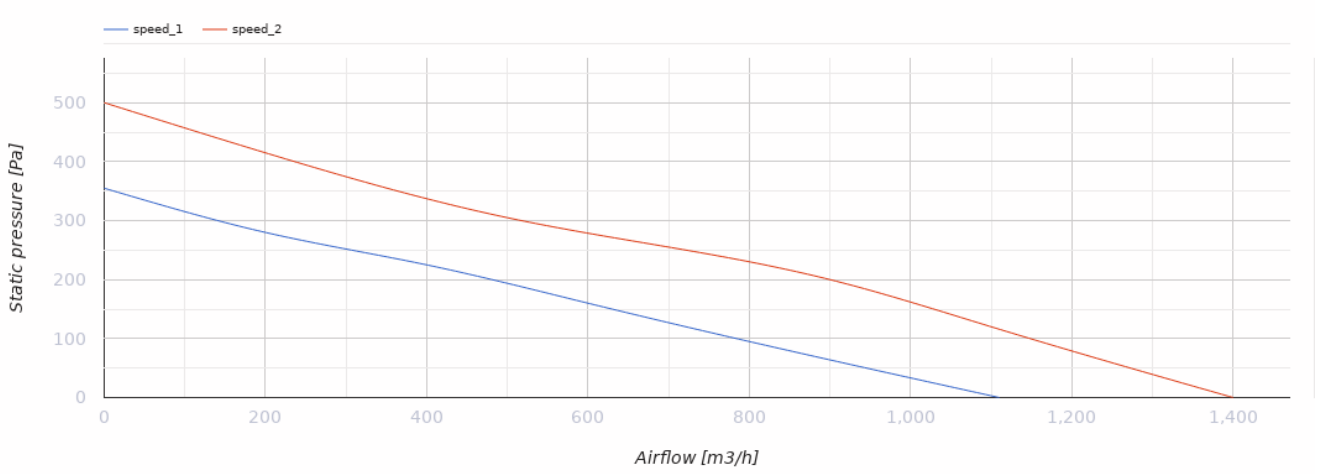

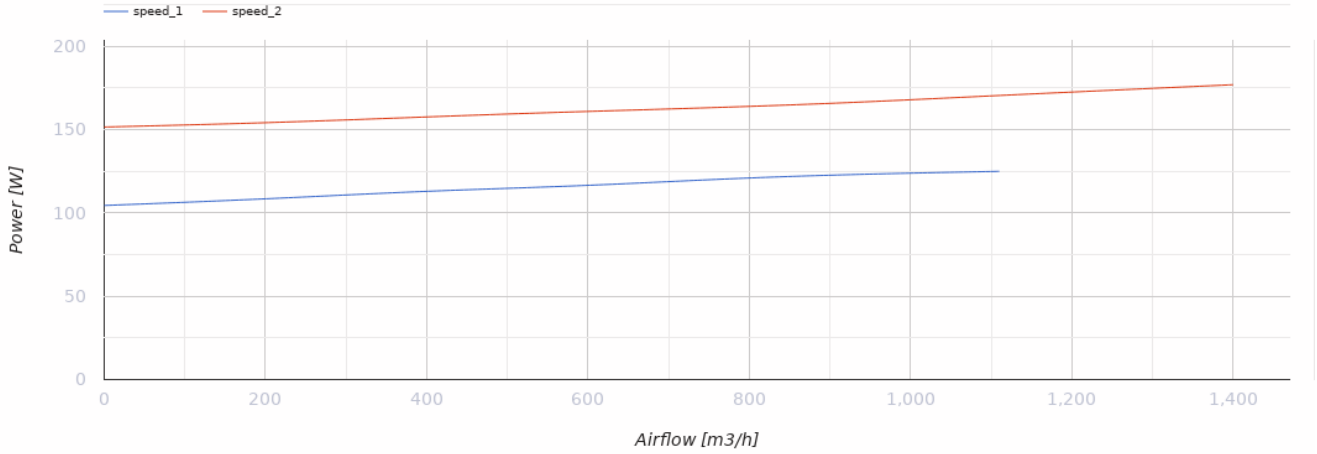

Dimensions

Ø D	H	L	L1	W	W1
248	360	665	130	445	370

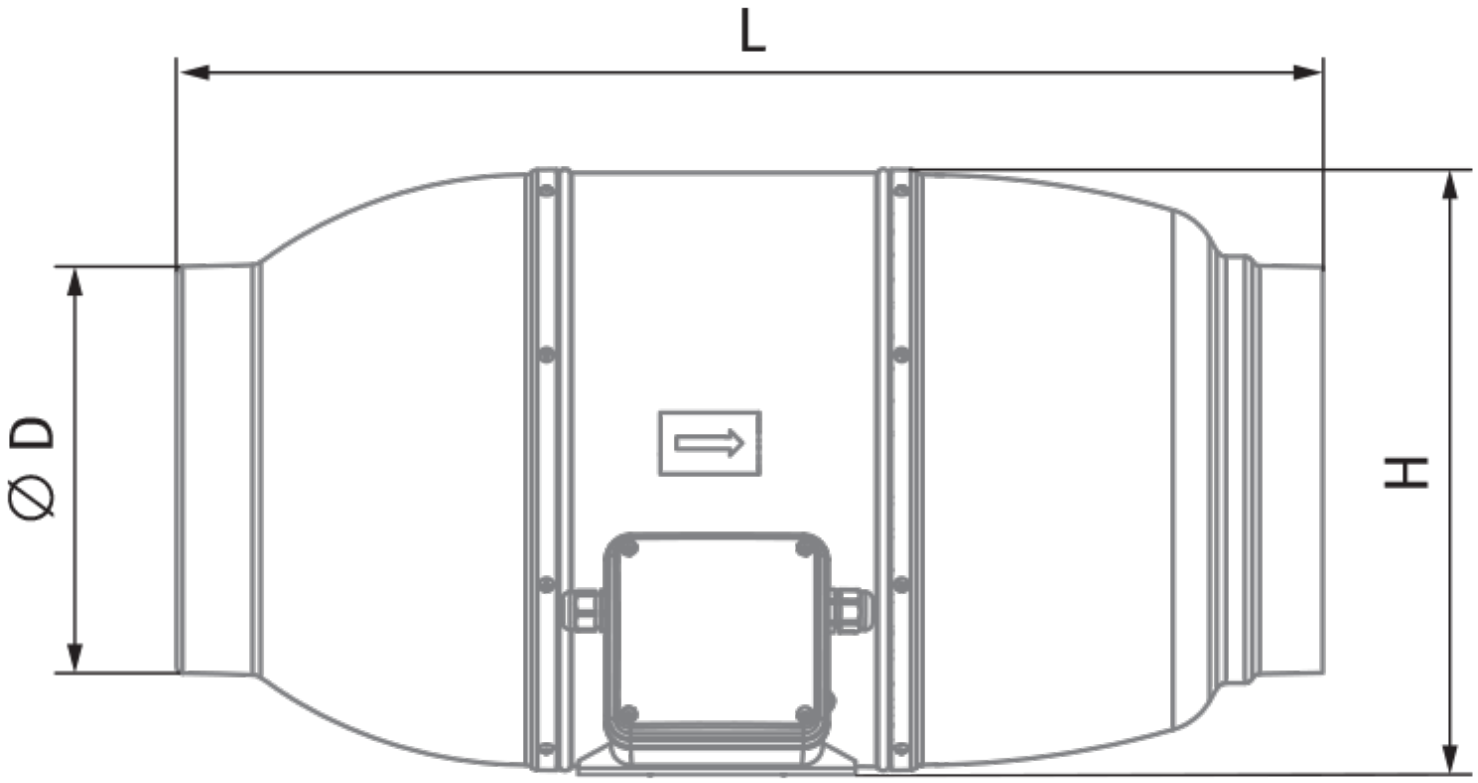
L
⌀ D
H

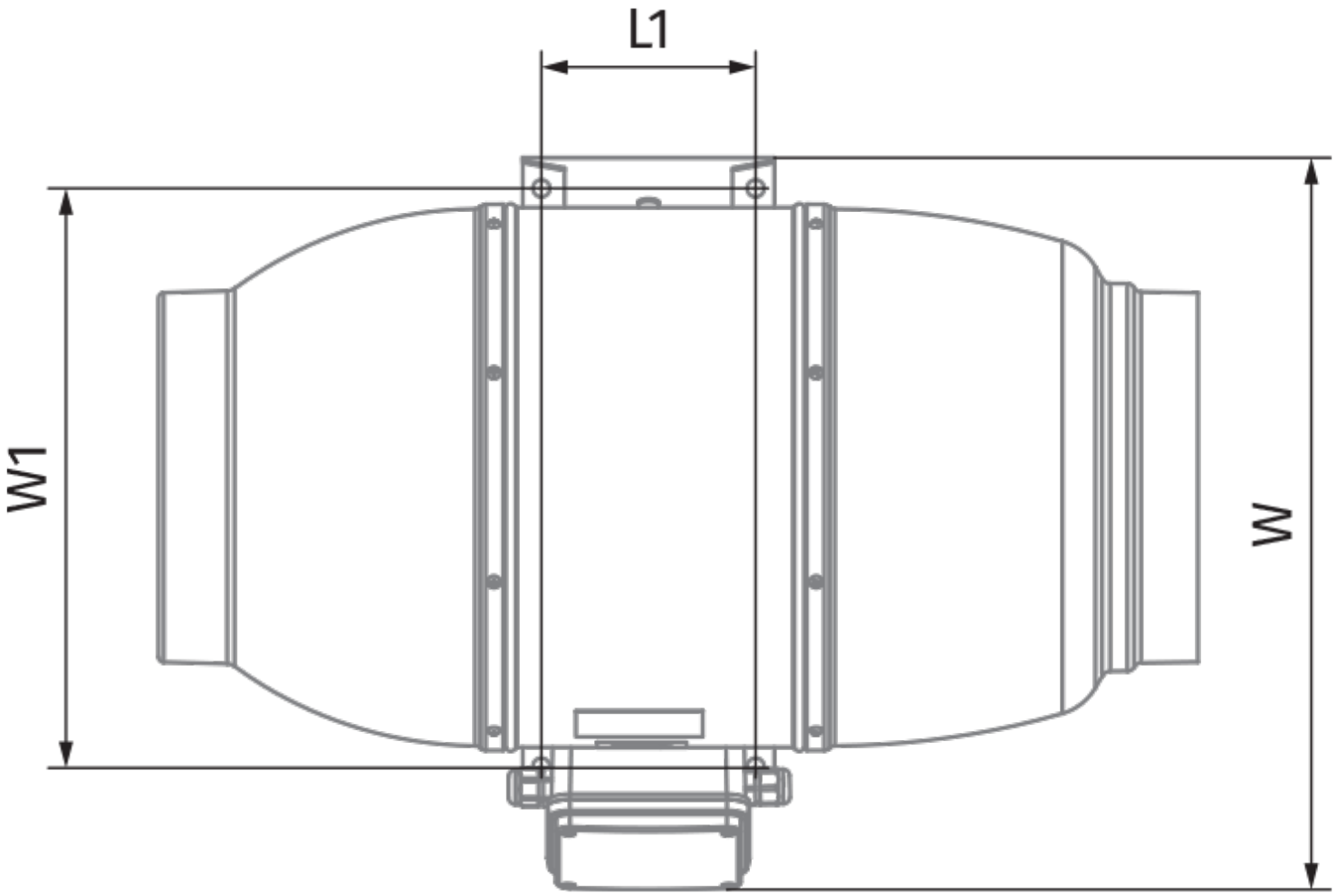
L1
W1
W

Ecodesign

Trademark	Blauberg
Model	Iso-Mix 250 USW1
Type of ventilation unit	Unidirectional
Type of drive installed	External MSD or VSD
Type of heat recovery system	None
Nominal external pressure (Pa)	236
Maximum external leakage rates (%)	2.7
Static efficiency (%)	30.9
Sound power level (dB(A))	56
Declared typology	NRVU UVU
Effective electric power input (kW)	0.174

Accessories

For round ducts

Name	Photo	Description
SD 250/600		Silencers for round ducts
SD 250/900		Silencers for round ducts
SD 250/1200		Silencers for round ducts

For round ducts

Name	Photo	Description
KFBK 250		Filter boxes for round ducts
KFBT 250 G4	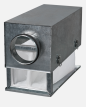	Filter boxes with pocket filters for round ducts

KFBT 250 F5		Filter boxes with pocket filters for round ducts
KFBT 250 F7		Filter boxes with pocket filters for round ducts

For round ducts

Name	Photo	Description
VRV 250		Backdraft dampers with spring for round ducts
VKA 250		Air dampers for round ducts

Water heaters

Name	Photo	Description
WKH 250-2		Duct water heaters for round ducts
WKH 250-4		Duct water heaters for round ducts

Electrical heaters

Name	Photo	Description
EKH 250-1.2		Duct electrical heaters for round ducts
EKH 250-2.0		Duct electrical heaters for round ducts
EKH 250-2.4		Duct electrical heaters for round ducts
EKH 250-3.0		Duct electrical heaters for round ducts
EKH 250-3.6		Duct electrical heaters for round ducts

EKH 250-6.0		Duct electrical heaters for round ducts
EKH 250-9.0		Duct electrical heaters for round ducts

Speed controllers

Name	Photo	Description
CDT E1.8		Thyristor speed controller
CDT1 E1.5		Multi-speed switches

Speed control switches

Name	Photo	Description
CDP-2/5		Multi-speed switch

Humidity sensors

Name	Photo	Description
HSE / HSI 1.5		Sensors
TE / TI 1.5		Timers
LSE / LSI 1.5		Sensors
IRSE / IRSI 1.5		Sensors