

Iso-Mix 160 GI1

Mixed-flow inline fans in sound-insulated casings

- Sound-insulated casing
- Control: Built-in speed controller
- Impeller type: Mixed-flow
- Casing material: Coated steel
- Installation in any position
- Cable with mains plug
- Temperature sensor: Built-in

	Unit of measurement	Iso-Mix 160 GI1	
Speed	-	1	2
Phases	-	1	
Minimum supply voltage	V	230	
Maximum supply voltage	V	230	
Power supply frequency	Hz	50/60	
Maximum airflow	m³/h	410	550
Weight	kg	6.1	
Transported air temperature (max)	°C	60	
Ingress protection rating	-	IPX4	
Ingress protection rating of the drive	-	IP44	
Impeller material	-	Plastic	

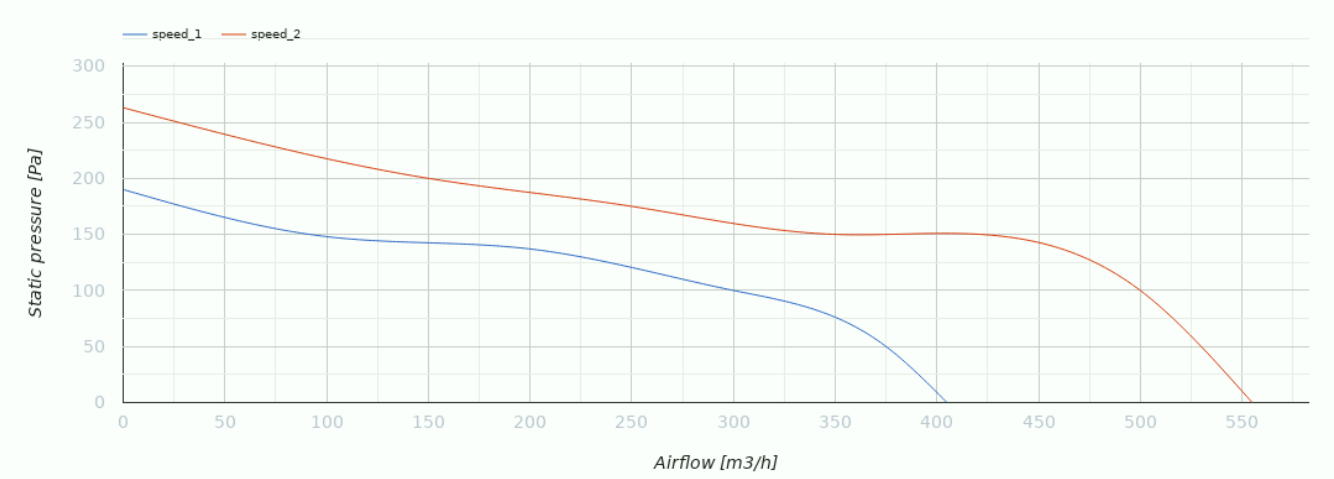

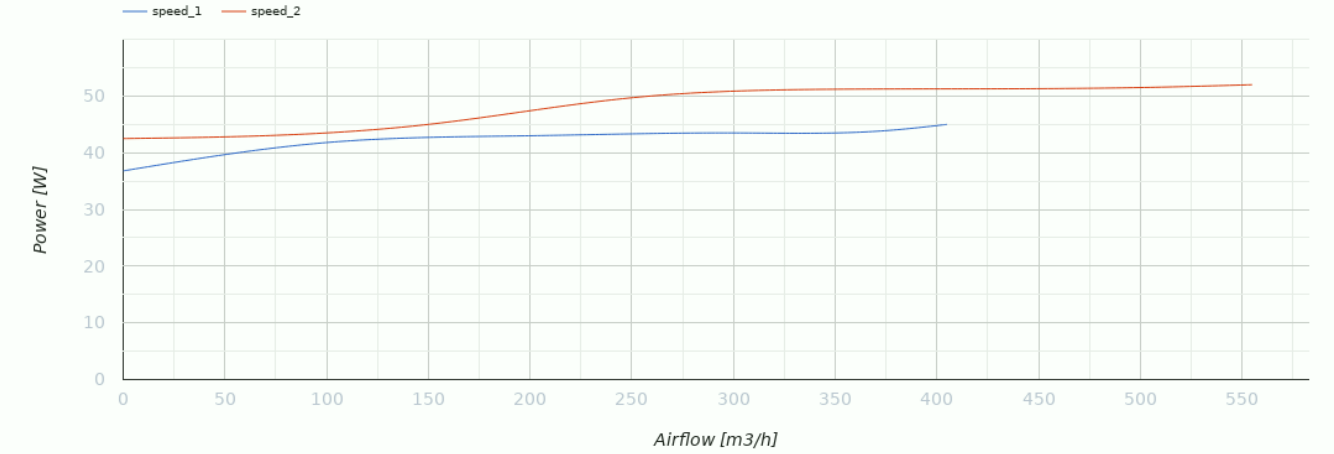

Dimensions

Ø D	H	L	L1	W	W1
157	263	580	44	273	231

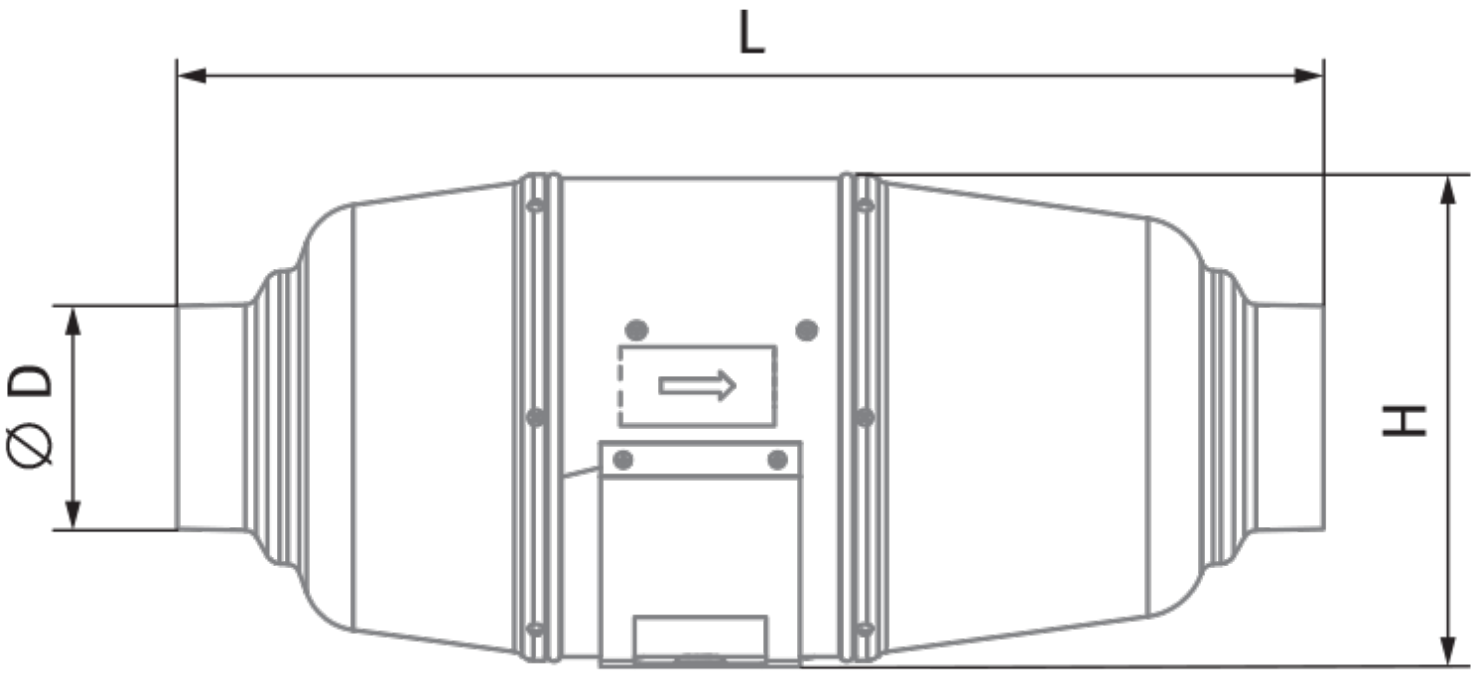
L
⌀ D
H

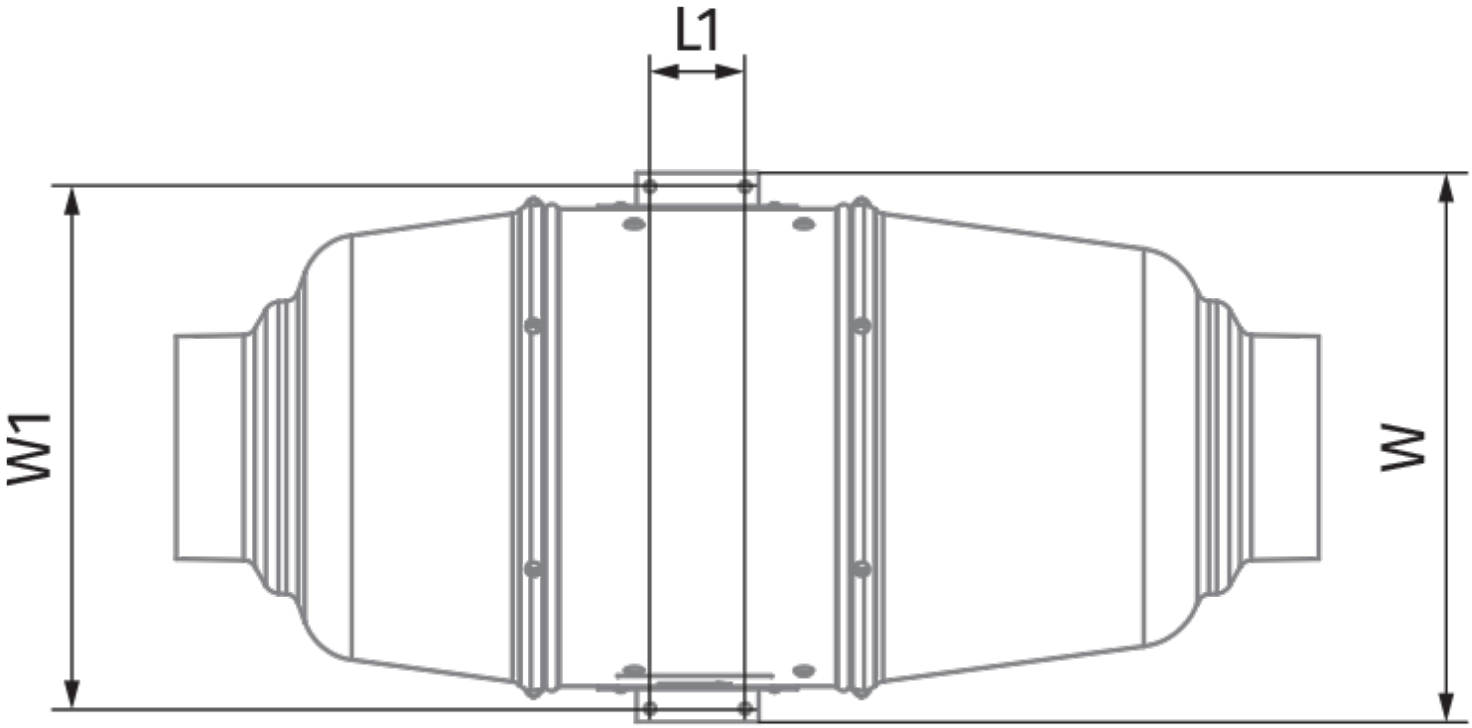
L1
W1
W

Ecodesign

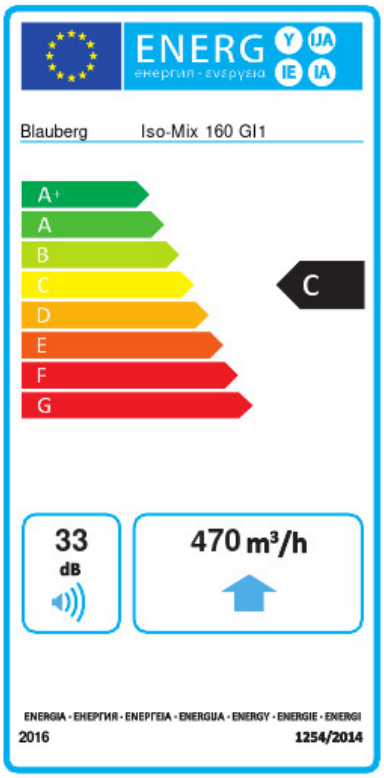

Trademark	Blauberg					
Model	Iso-Mix 160 GI1					
Specific energy consumption (SEC) (kWh/(m²/a))	Cold		Average		Warm	
	-52.8	A+	-25.7	C	-10.2	E
Type of ventilation unit	Unidirectional					
Type of drive installed	Multi-speed					
Type of heat recovery system	None					
Maximum flow rate (m³/h)	470					
Electric power input (W)	52					
Reference flow rate (m³/s)	0.091					
Reference pressure difference (Pa)	50					
Specific power input (SPI) (W/(m³/h))	0.137					
Control typology	Local demand control					
Maximum external leakage rates (%)	2.7					
Declared typology	RVU UVU					
Sound power level (dB(A))	33					
The annual electricity consumption (AEC) (kWh/a)	Cold		Average		Warm	
	102		102		102	
The annual heating saved (AHS) (kWh/a)	Cold		Average		Warm	
	5536		2830		1280	

Accessories

For round ducts

Name	Photo	Description
SD 160/600		Silencers for round ducts
SD 160/900		Silencers for round ducts
SD 160/1200		Silencers for round ducts

For round ducts

Name	Photo	Description
KFBK 160		Filter boxes for round ducts
KFBT 160 G4	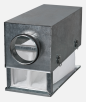	Filter boxes with pocket filters for round ducts
KFBT 160 F5		Filter boxes with pocket filters for round ducts
KFBT 160 F7		Filter boxes with pocket filters for round ducts

For round ducts

Name	Photo	Description
VRV 160		Backdraft dampers with spring for round ducts
VKA 160		Air dampers for round ducts

Water heaters

Name	Photo	Description
WKH 160-2		Duct water heaters for round ducts
WKH 160-4		Duct water heaters for round ducts

Electrical heaters

Name	Photo	Description
EKH 160-1.2		Duct electrical heaters for round ducts
EKH 160-1.7		Duct electrical heaters for round ducts

EKH 160-2.0		Duct electrical heaters for round ducts
EKH 160-2.4		Duct electrical heaters for round ducts
EKH 160-3.4		Duct electrical heaters for round ducts
EKH 160-3.6		Duct electrical heaters for round ducts
EKH 160-5.1		Duct electrical heaters for round ducts
EKH 160-6.0		Duct electrical heaters for round ducts

Speed controllers

Name	Photo	Description
CDT E1.8		Thyristor speed controller
CDT1 E0.5		Multi-speed switches

Speed control switches

Name	Photo	Description
CDP-2/5		Multi-speed switch

Humidity sensors

Name	Photo	Description
HSE / HSI 1.5		Sensors
TE / TI 1.5		Timers

LSE / LSI 1.5		Sensors
IRSE / IRSI 1.5		Sensors

Fittings

Name	Photo	Description
K 160		Clamp for round flexible ducts