

# Iso-Mix 160 G1

Mixed-flow inline fans in sound-insulated casings

- Sound-insulated casing
- Control: Built-in speed controller
- Impeller type: Mixed-flow
- Casing material: Coated steel
- Installation in any position
- Cable with mains plug
- Temperature sensor: Built-in

| | Unit of measurement | Iso-Mix 160 G1 | |
|---|---|---|---|
| Speed | - | 1 | 2 |
| Phases | - | 1 | |
| Minimum supply voltage | V | 230 | |
| Maximum supply voltage | V | 230 | |
| Power supply frequency | Hz | 50/60 | |
| Maximum airflow | m³/h | 410 | 550 |
| Weight | kg | 6.1 | |
| Transported air temperature (max) | °C | 60 | |
| Ingress protection rating | - | IPX4 | |
| Ingress protection rating of the drive | - | IP44 | |
| Impeller material | - | Plastic | |

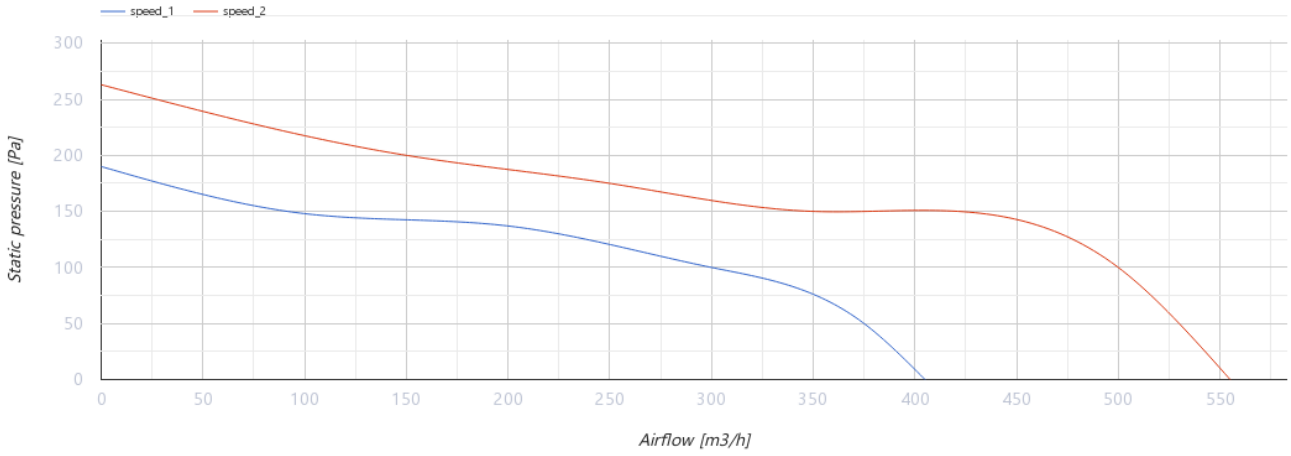


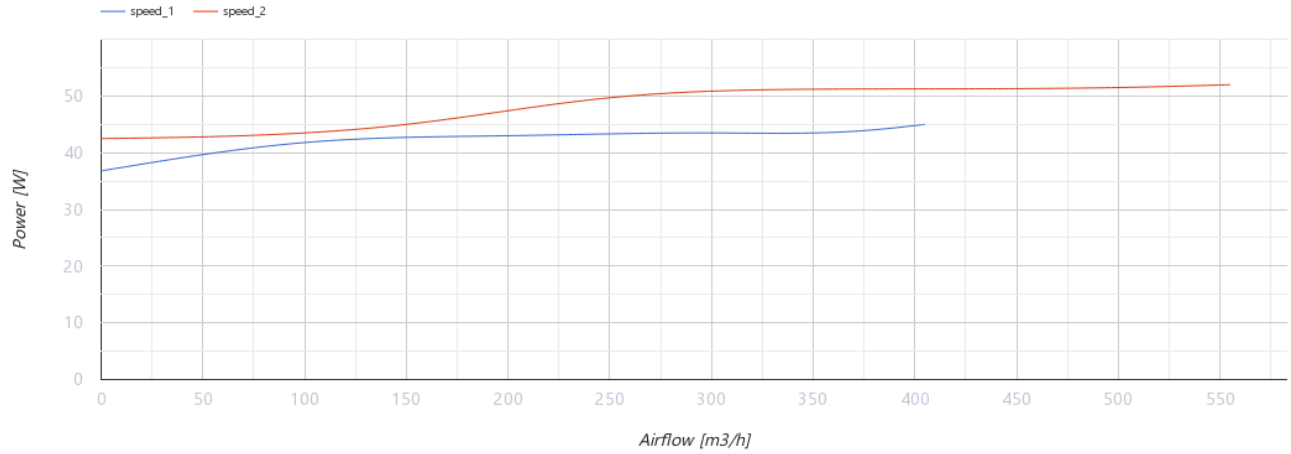


## Dimensions

| Ø D | H | L | L1 | W | W1 |
|---|---|---|---|---|---|
| 157 | 263 | 580 | 44 | 273 | 231 |

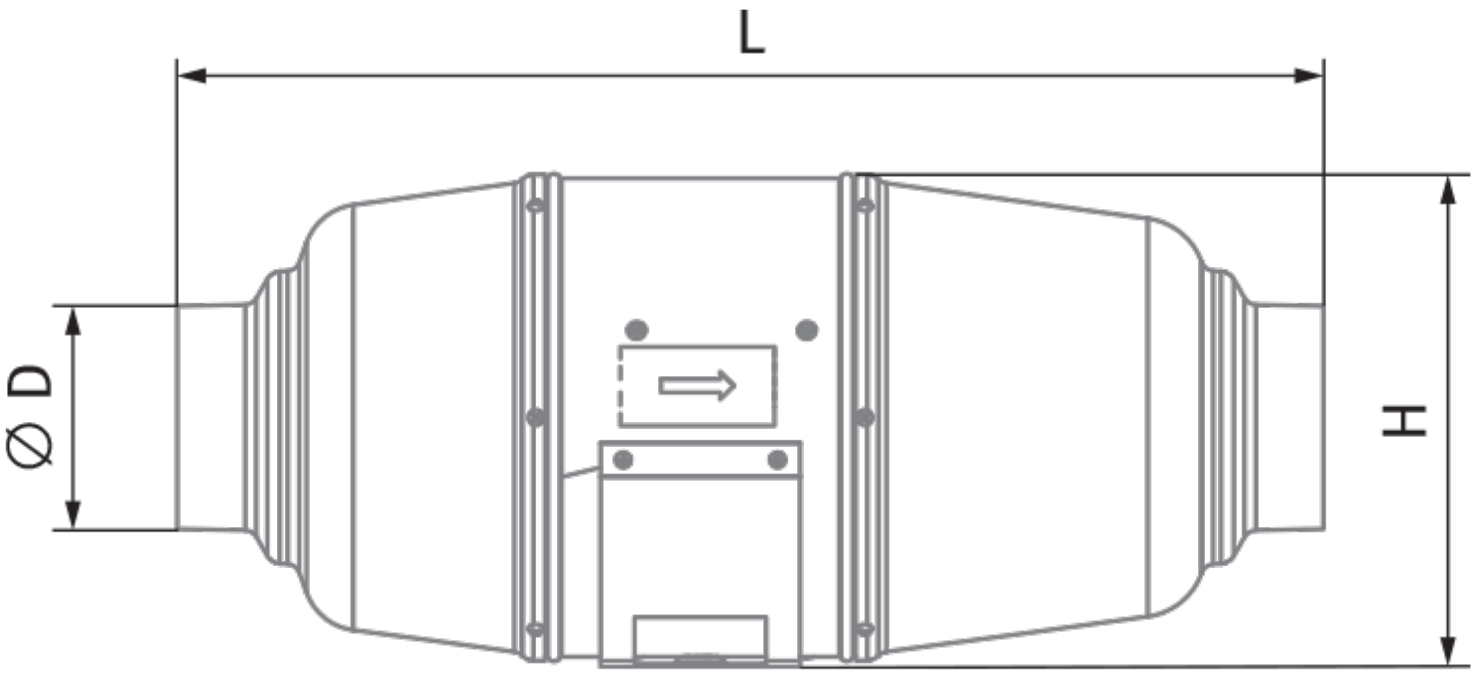
L
⌀ D
H

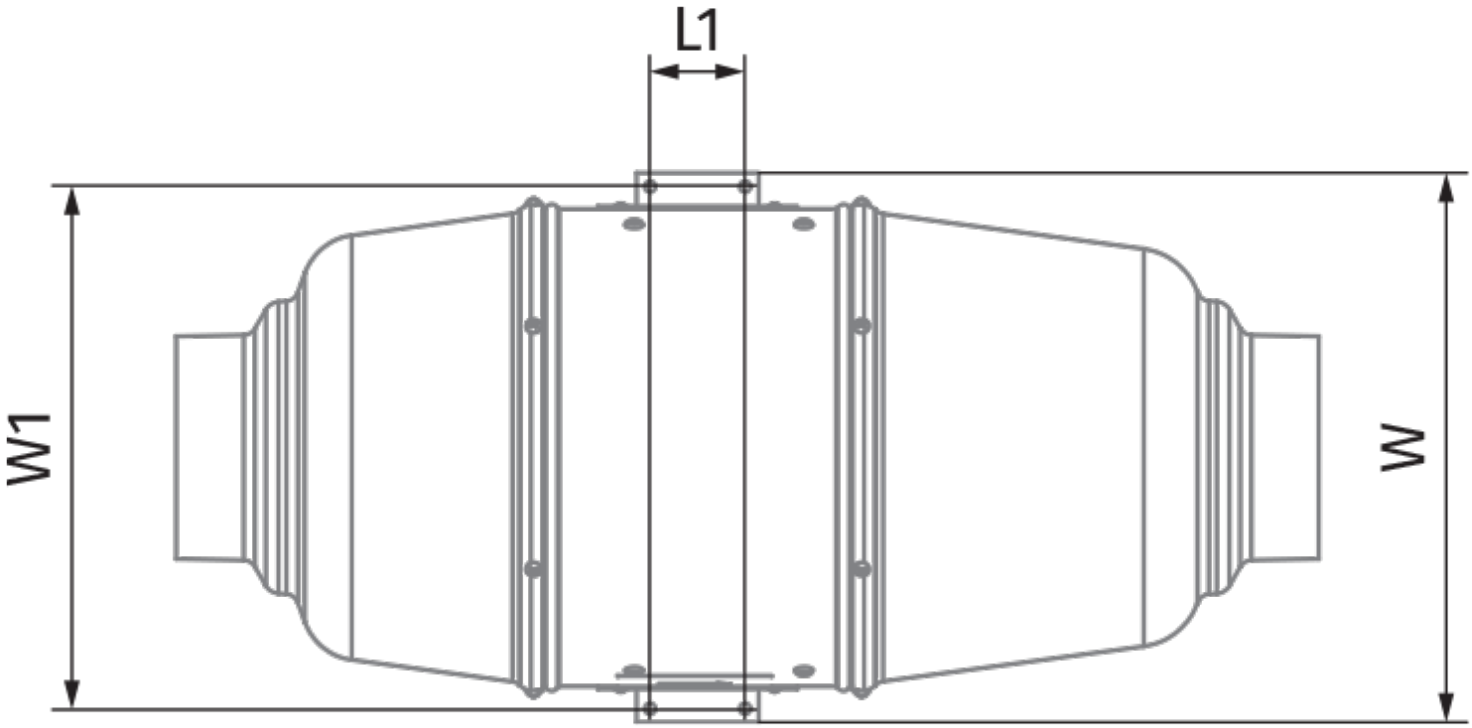
L1
W1
W

## Ecodesign

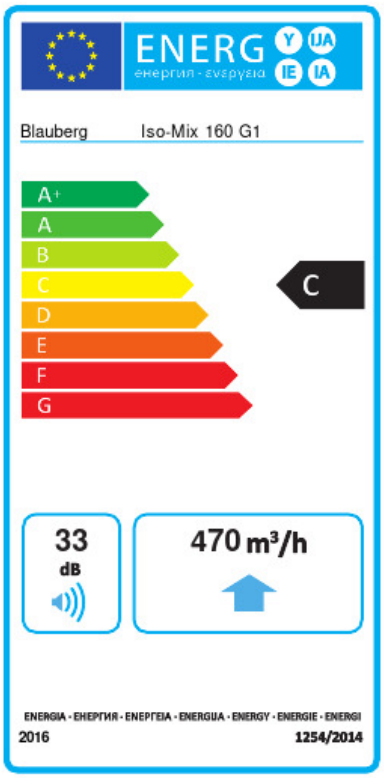


| | | | | | |
|---|---|---|---|---|---|
| Trademark | Blauberg | | | | |
| Model | Iso-Mix 160 G1 | | | | |
| Specific energy consumption (SEC) (kWh/(m²/a)) | Cold | | Average | | Warm | |
| | -52.8 | A+ | -25.7 | C | -10.2 | E |
| Type of ventilation unit | Unidirectional | | | | |
| Type of drive installed | Multi-speed | | | | |
| Type of heat recovery system | None | | | | |
| Maximum flow rate (m³/h) | 470 | | | | |
| Electric power input (W) | 52 | | | | |
| Reference flow rate (m³/s) | 0.091 | | | | |
| Reference pressure difference (Pa) | 50 | | | | |
| Specific power input (SPI) (W/(m³/h)) | 0.137 | | | | |
| Control typology | Local demand control | | | | |
| Maximum external leakage rates (%) | 2.7 | | | | |
| Declared typology | RVU UVU | | | | |
| Sound power level (dB(A)) | 33 | | | | |
| The annual electricity consumption (AEC) (kWh/a) | Cold | | Average | | Warm | |
| | 102 | | 102 | | 102 | |
| The annual heating saved (AHS) (kWh/a) | Cold | | Average | | Warm | |
| | 5536 | | 2830 | | 1280 | |

## Accessories

### For round ducts

| Name | Photo | Description |
|---|---|---|
| SD 160/600 |  | Silencers for round ducts |
| SD 160/900 |  | Silencers for round ducts |
| SD 160/1200 |  | Silencers for round ducts |

### For round ducts

| Name | Photo | Description |
|---|---|---|
| KFBK 160 |  | Filter boxes for round ducts |
| KFBT 160 G4 | 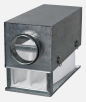 | Filter boxes with pocket filters for round ducts |
| KFBT 160 F5 |  | Filter boxes with pocket filters for round ducts |
| KFBT 160 F7 |  | Filter boxes with pocket filters for round ducts |

### For round ducts

| Name | Photo | Description |
|---|---|---|
| VRV 160 |  | Backdraft dampers with spring for round ducts |
| VKA 160 |  | Air dampers for round ducts |

### Water heaters

| Name | Photo | Description |
|---|---|---|
| WKH 160-2 |  | Duct water heaters for round ducts |
| WKH 160-4 |  | Duct water heaters for round ducts |

### Electrical heaters

| Name | Photo | Description |
|---|---|---|
| EKH 160-1.2 |  | Duct electrical heaters for round ducts |
| EKH 160-1.7 |  | Duct electrical heaters for round ducts |

| | | |
|---|---|---|
| EKH 160-2.0 |  | Duct electrical heaters for round ducts |
| EKH 160-2.4 |  | Duct electrical heaters for round ducts |
| EKH 160-3.4 |  | Duct electrical heaters for round ducts |
| EKH 160-3.6 |  | Duct electrical heaters for round ducts |
| EKH 160-5.1 |  | Duct electrical heaters for round ducts |
| EKH 160-6.0 |  | Duct electrical heaters for round ducts |

### Speed controllers

| Name | Photo | Description |
|---|---|---|
| CDT E1.8 |  | Thyristor speed controller |
| CDT1 E0.5 |  | Multi-speed switches |

### Speed control switches

| Name | Photo | Description |
|---|---|---|
| CDP-2/5 |  | Multi-speed switch |

### Humidity sensors

| Name | Photo | Description |
|---|---|---|
| HSE / HSI 1.5 |  | Sensors |
| TE / TI 1.5 |  | Timers |

| | | |
|---|---|---|
| LSE / LSI 1.5 |  | Sensors |
| IRSE / IRSI 1.5 |  | Sensors |

### Fittings

| Name | Photo | Description |
|---|---|---|
| K 160 |  | Clamp for round flexible ducts |