

Iso-Mix 100 T

Mixed-flow inline fans in sound-insulated casings

- Sound-insulated casing
- Impeller type: Mixed-flow
- Casing material: Coated steel
- Installation in any position
- Timer: Turn off timer

	Unit of measurement	Iso-Mix 100 T		
Speed	-	1	2	3
Phases	-	1		
Minimum supply voltage	V	230		
Maximum supply voltage	V	230		
Power supply frequency	Hz	50/60		
Maximum airflow	m³/h	100	140	240
Weight	kg	4.7		
Transported air temperature (max)	°C	60		
Ingress protection rating	-	IPX4		
Ingress protection rating of the drive	-	IP44		
Impeller material	-	Plastic		

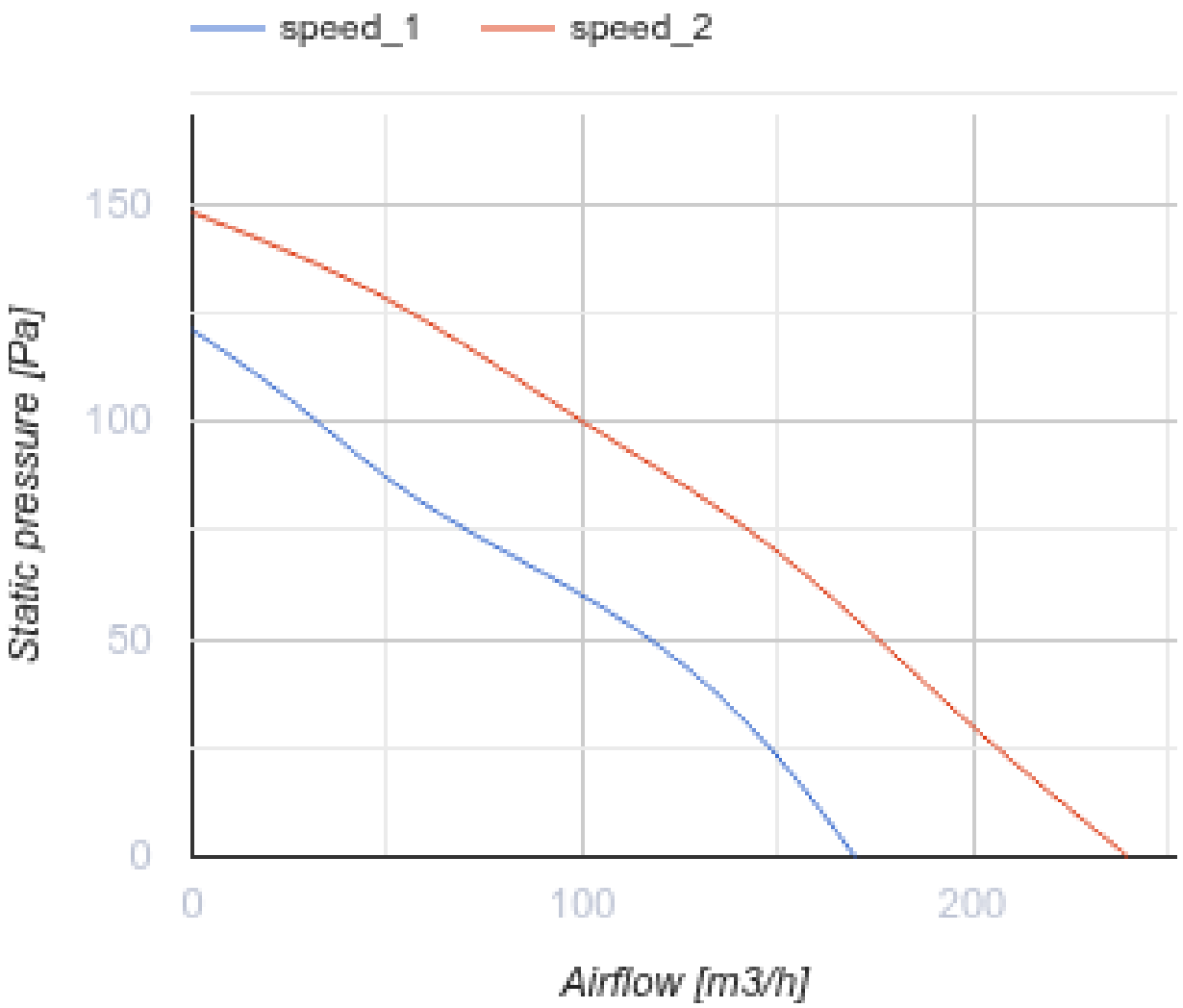
speed_1
speed_2
150
100
50
0
Static pressure [Pa]
0
100
200
Airflow [m3/h]

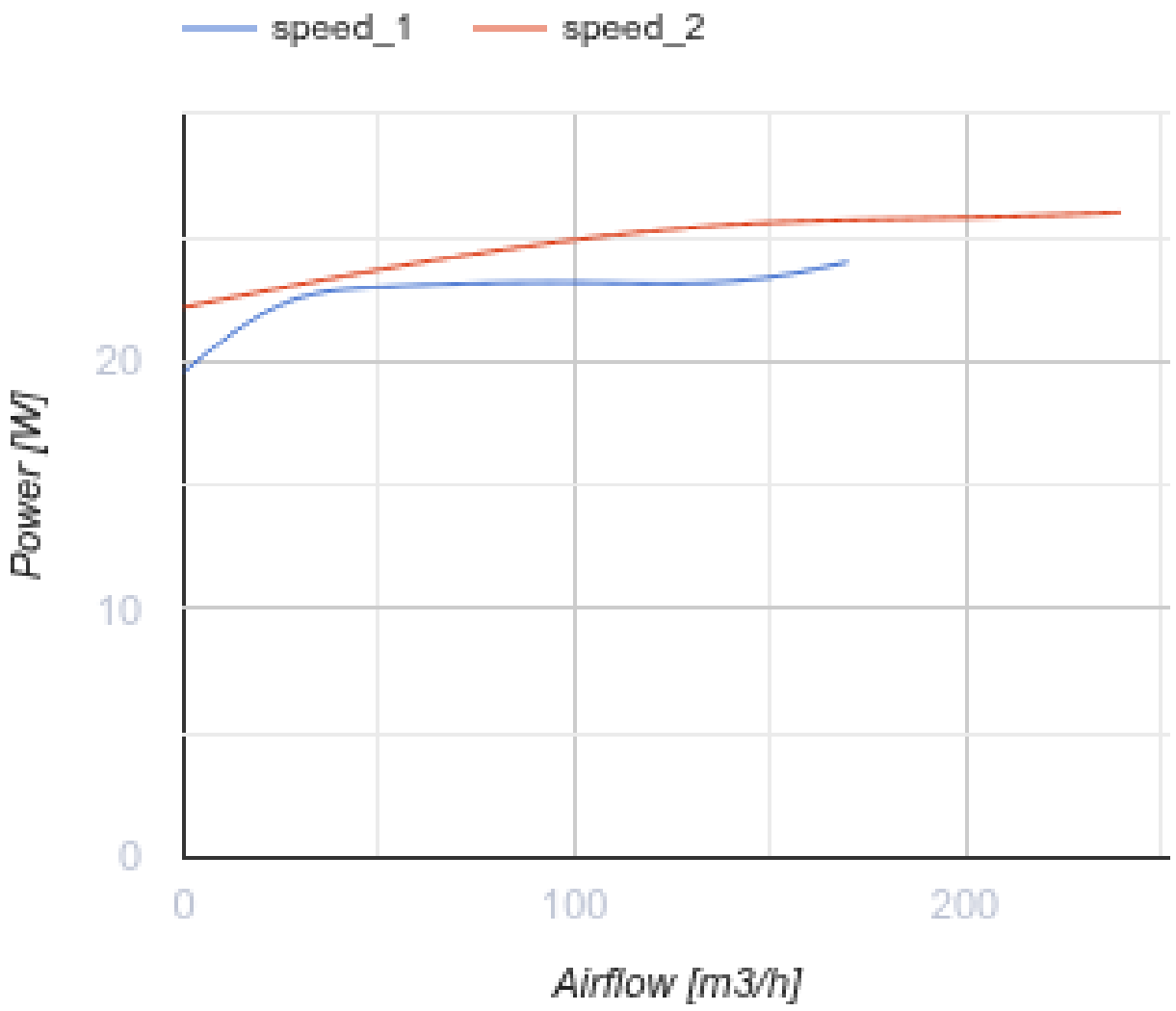

Dimensions

Ø D	H	L	L1	W	W1
98	220	505	42	243	231

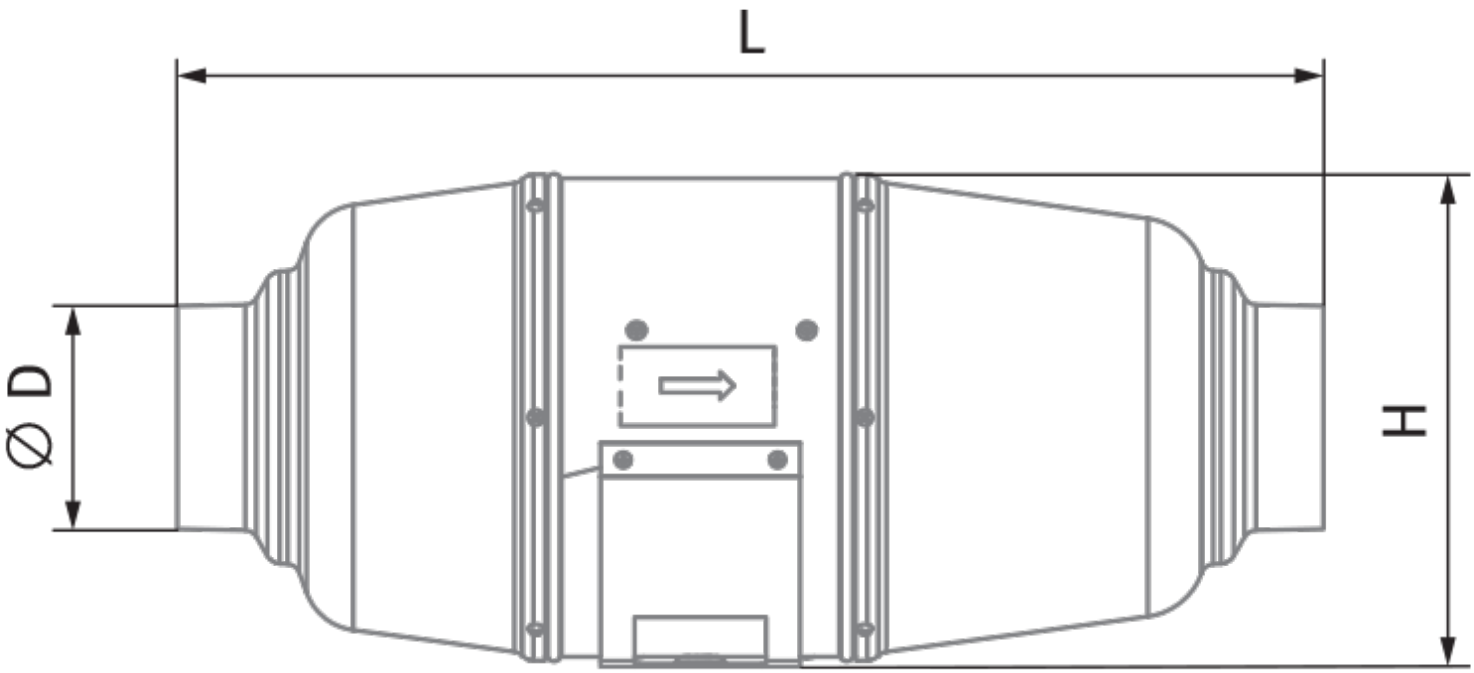
L
⌀ D
H

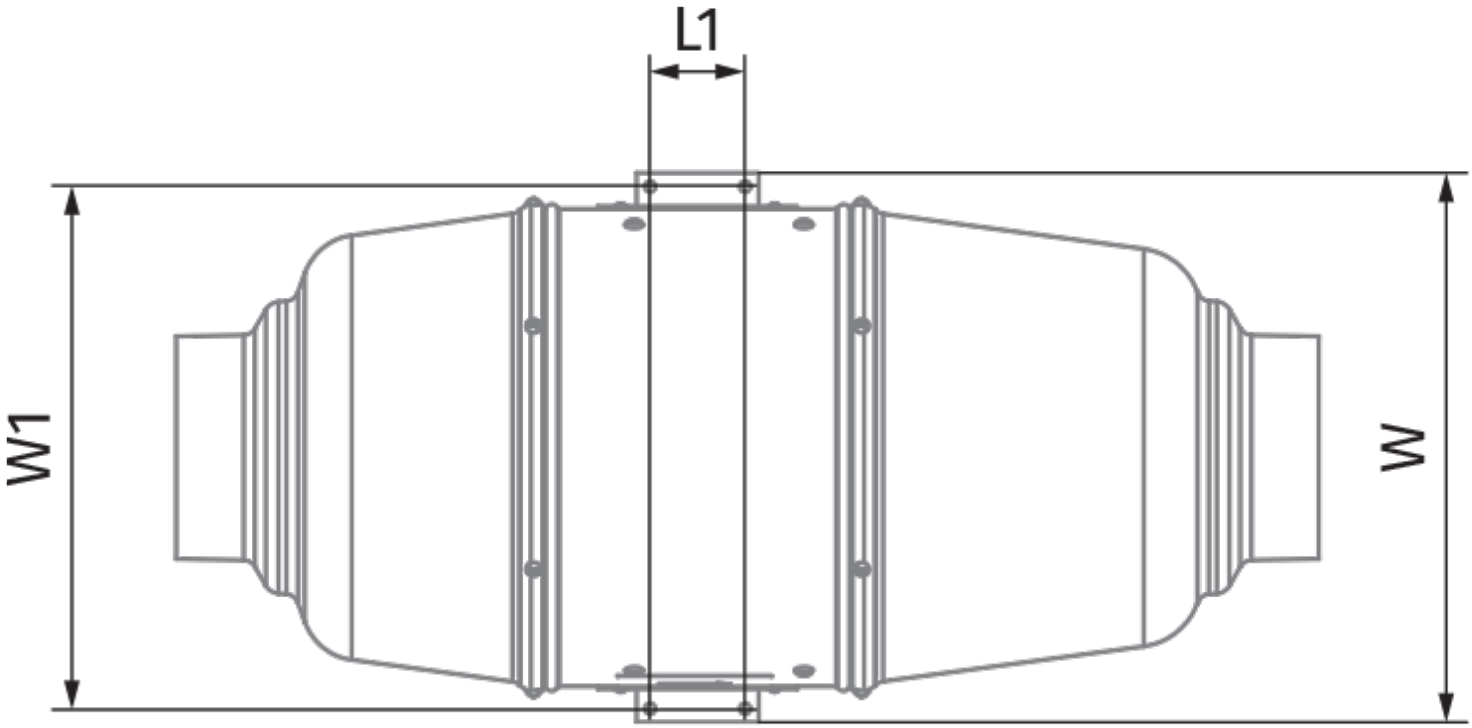
L1
W1
W

Ecodesign

Trademark	Blauberg					
Model	Iso-Mix 100 T					
Specific energy consumption (SEC) (kWh/(m²/a))	Cold		Average		Warm	
	-53.7	A+	-26.6	B	-11.1	E
Type of ventilation unit	Unidirectional					
Type of drive installed	Multi-speed					
Type of heat recovery system	None					
Maximum flow rate (m³/h)	75					
Electric power input (W)	21					
Reference flow rate (m³/s)	0.027					
Reference pressure difference (Pa)	50					
Specific power input (SPI) (W/(m³/h))	0.125					
Control typology	Local demand control					
Maximum external leakage rates (%)	2.7					
Declared typology	RVU UVU					
Sound power level (dB(A))	47					
The annual electricity consumption (AEC) (kWh/a)	Cold		Average		Warm	
	66		66		66	
The annual heating saved (AHS) (kWh/a)	Cold		Average		Warm	
	5536		2830		1280	

Accessories

For round ducts

Name	Photo	Description
SD 100/600		Silencers for round ducts
SD 100/900		Silencers for round ducts
SD 100/1200		Silencers for round ducts

For round ducts

Name	Photo	Description
KFBK 100		Filter boxes for round ducts
KFBT 100 G4	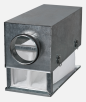	Filter boxes with pocket filters for round ducts
KFBT 100 F5		Filter boxes with pocket filters for round ducts
KFBT 100 F7		Filter boxes with pocket filters for round ducts

For round ducts

Name	Photo	Description
VRV 100		Backdraft dampers with spring for round ducts
VKA 100		Air dampers for round ducts

Water heaters

Name	Photo	Description
WKH 100-2		Duct water heaters for round ducts
WKH 100-4		Duct water heaters for round ducts

Electrical heaters

Name	Photo	Description
EKH 100-0.6		Duct electrical heaters for round ducts
EKH 100-0.8		Duct electrical heaters for round ducts

EKH 100-1.2		Duct electrical heaters for round ducts
EKH 100-1.6		Duct electrical heaters for round ducts
EKH 100-1.8		Duct electrical heaters for round ducts

Speed controllers

Name	Photo	Description
CDT E1.8		Thyristor speed controller
CDT1 E0.5		Multi-speed switches

Speed control switches

Name	Photo	Description
CDP-3/5		Multi-speed switch

Humidity sensors

Name	Photo	Description
HSE / HSI 1.5		Sensors
TE / TI 1.5		Timers
LSE / LSI 1.5		Sensors
IRSE / IRSI 1.5		Sensors