

Iso-K 450 4D

Kitchen inline fans in sound-insulated casings with operational temperature of 120 °C

- Sound-insulated casing
- Impeller type: Centrifugal impeller with backward curved blades
- Casing material: Galvanized steel

	Unit of measurement	Iso-K 450 4D
Phases	-	3
Minimum supply voltage	V	400
Maximum supply voltage	V	400
Power supply frequency	Hz	50
Maximum airflow	m^3/h	7840
Weight	kg	109
Transported air temperature (max)	°C	110
Transported air temperature (min)	°C	-20
Ingress protection rating	-	IP54
Impeller material	-	Galvanized steel
Size	mm	450

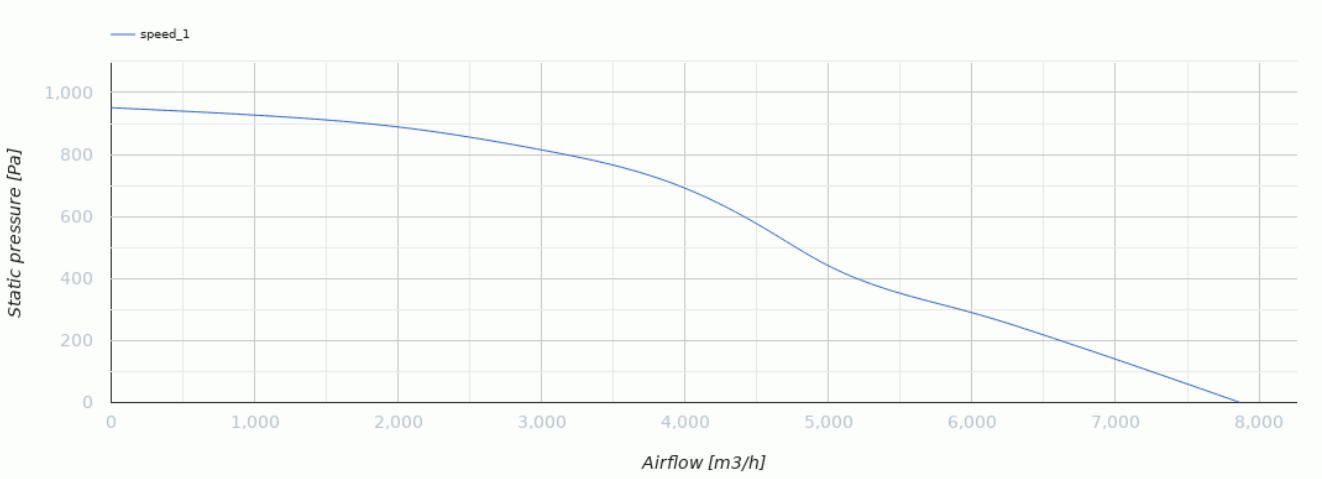

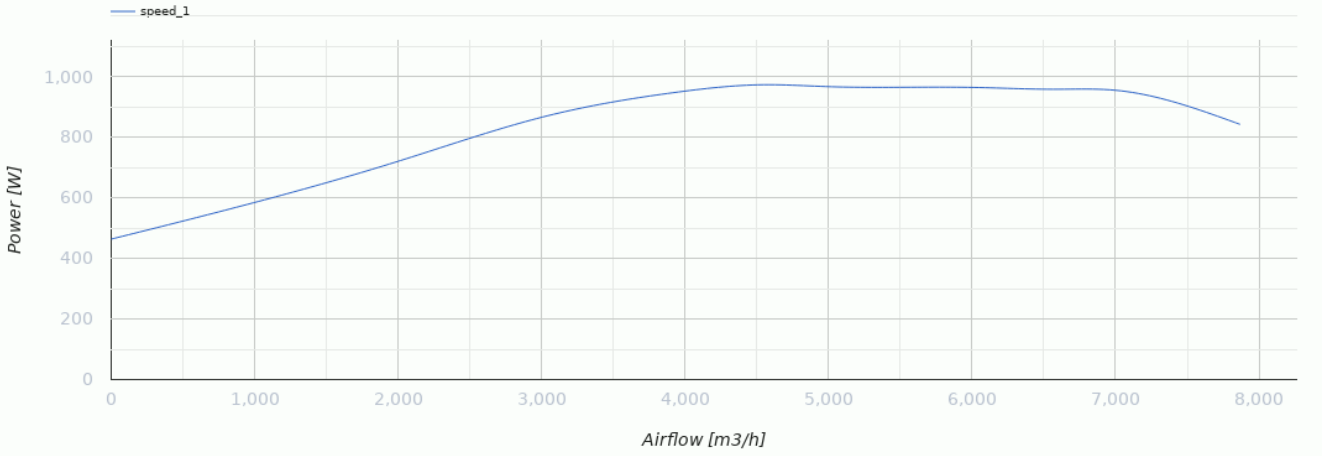

Dimensions

Ø D	B	B1	H	H1	L	L1	L2	L3	L4
450	996	750	980	870	925	900	850	782	437

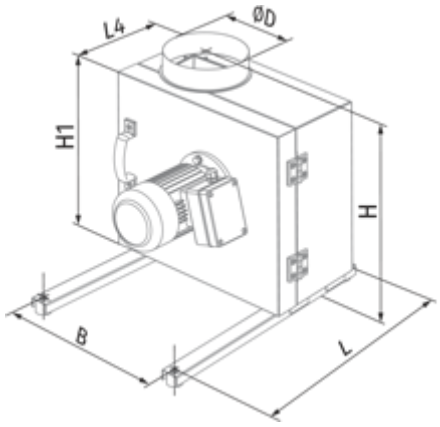

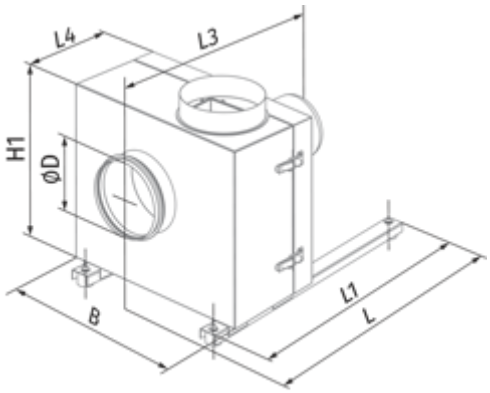
L4
L3
H1
ØD
B
L1
L