

Iso-K 355 4D

Kitchen inline fans in sound-insulated casings with operational temperature of 120 °C

- Sound-insulated casing
- Impeller type: Centrifugal impeller with backward curved blades
- Casing material: Galvanized steel

	Unit of measurement	Iso-K 355 4D
Phases	-	3
Maximum supply voltage	V	400
Minimum supply voltage	V	400
Power supply frequency	Hz	50/60
Maximum airflow	m^3/h	3155
Weight	kg	59
Transported air temperature (max)	°C	110
Transported air temperature (min)	°C	-20
Ingress protection rating	-	IP54
Impeller material	-	Galvanized steel
Size	mm	355

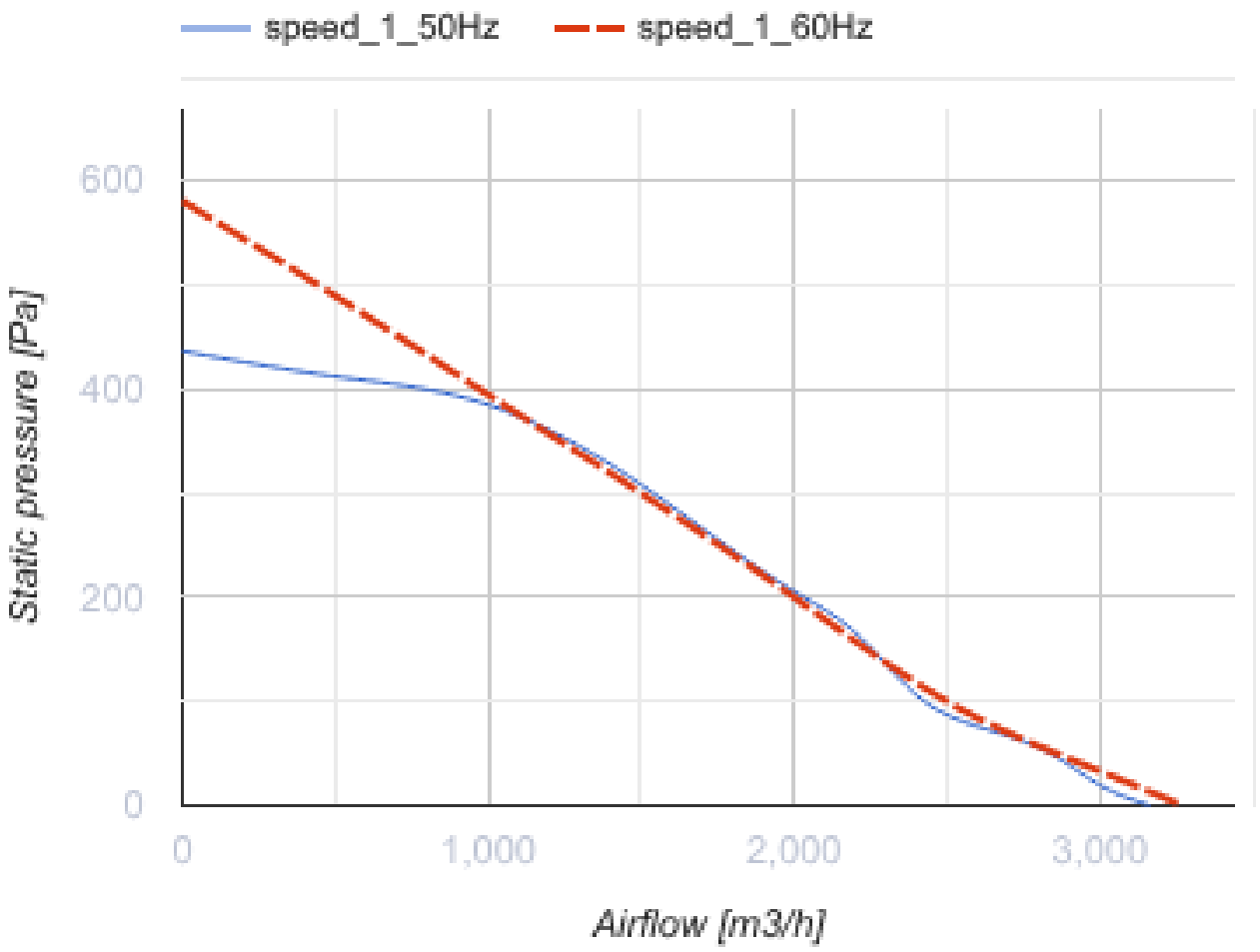
speed_1_50Hz
speed_1_60Hz
600
400
200
0
Static pressure [Pa]
0
1,000
2,000
3,000
Airflow [m3/h]

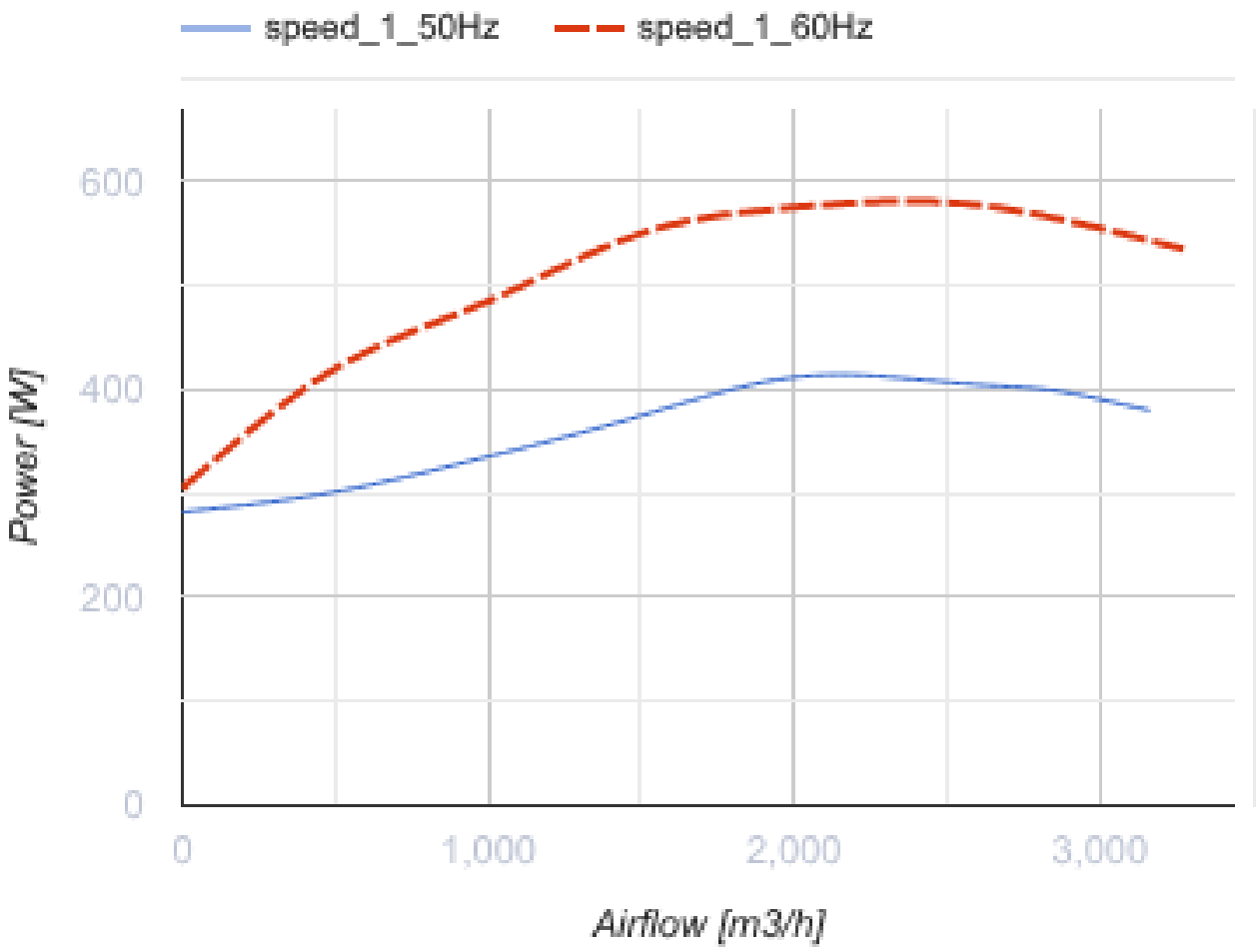

Dimensions

Ø D	B	B1	H	H1	L	L1	L2	L3	L4
355	740	600	764	655	727	700	650	637	352

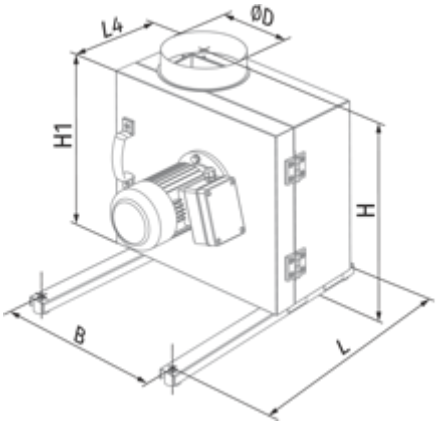

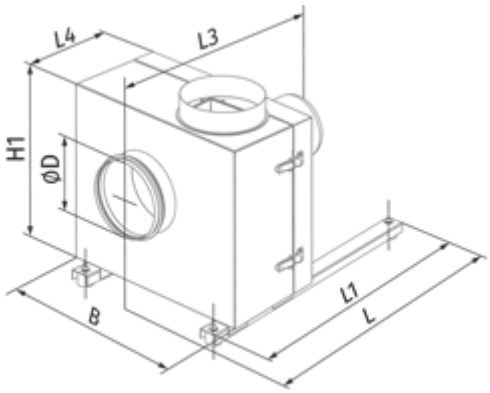
L4
L3
H1
ØD
B
L1
L