

Iso-K 200 4D

Kitchen inline fans in sound-insulated casings with operational temperature of 120 °C

• Sound-insulated casing
• Impeller type: Centrifugal impeller with forward curved blades
• Casing material: Galvanized steel

	Unit of measurement	Iso-K 200 4D
Phases	-	3
Minimum supply voltage	V	400
Maximum supply voltage	V	400
Power supply frequency	Hz	50
Maximum airflow	m³/h	1650
Weight	kg	25
Transported air temperature (max)	°C	120
Transported air temperature (min)	°C	-20
Ingress protection rating	-	IP54
Impeller material	-	Galvanized steel
Size	mm	200

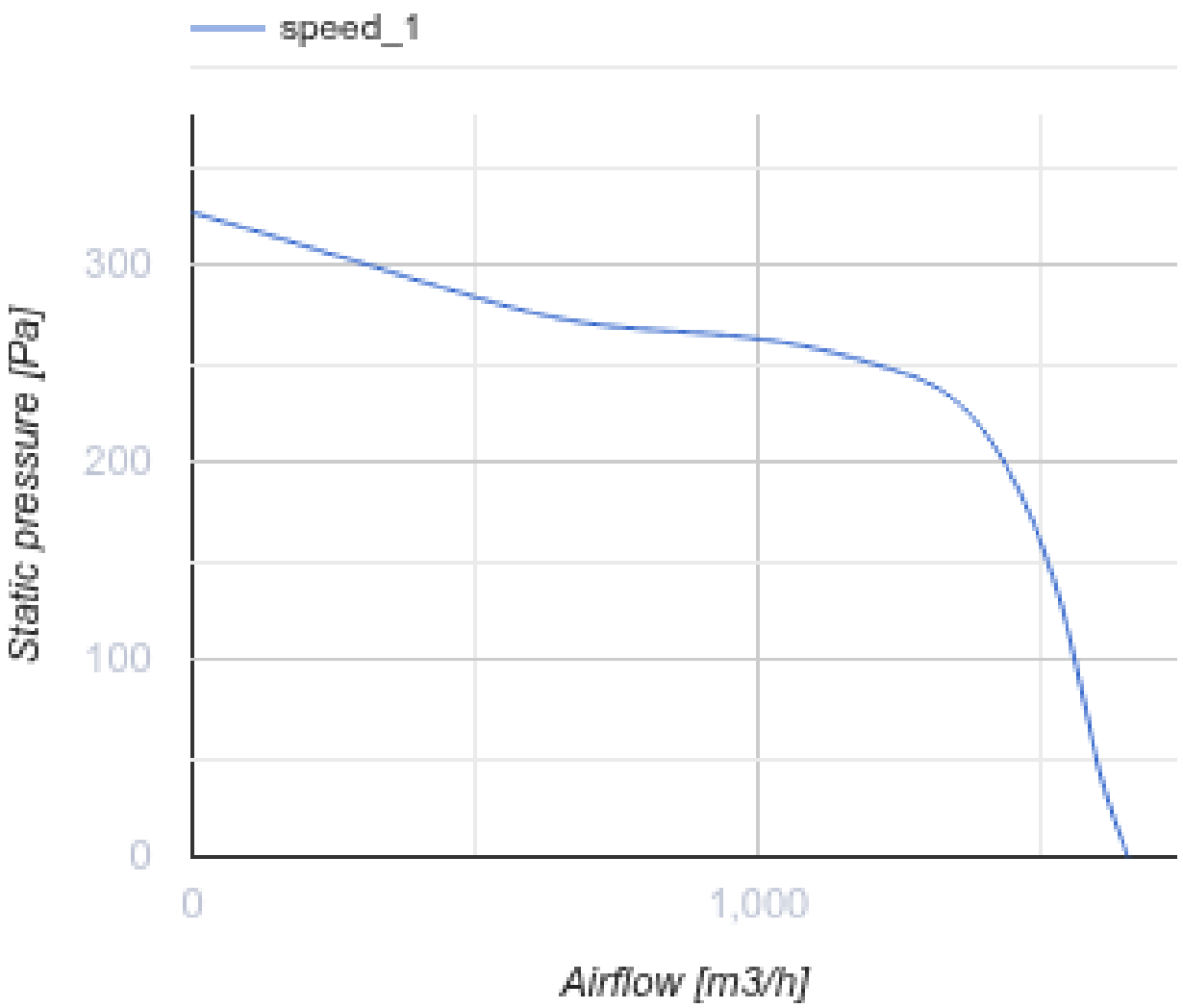
speed_1
300
200
100
0
Static pressure [Pa]
0
1,000
Airflow [m3/h]

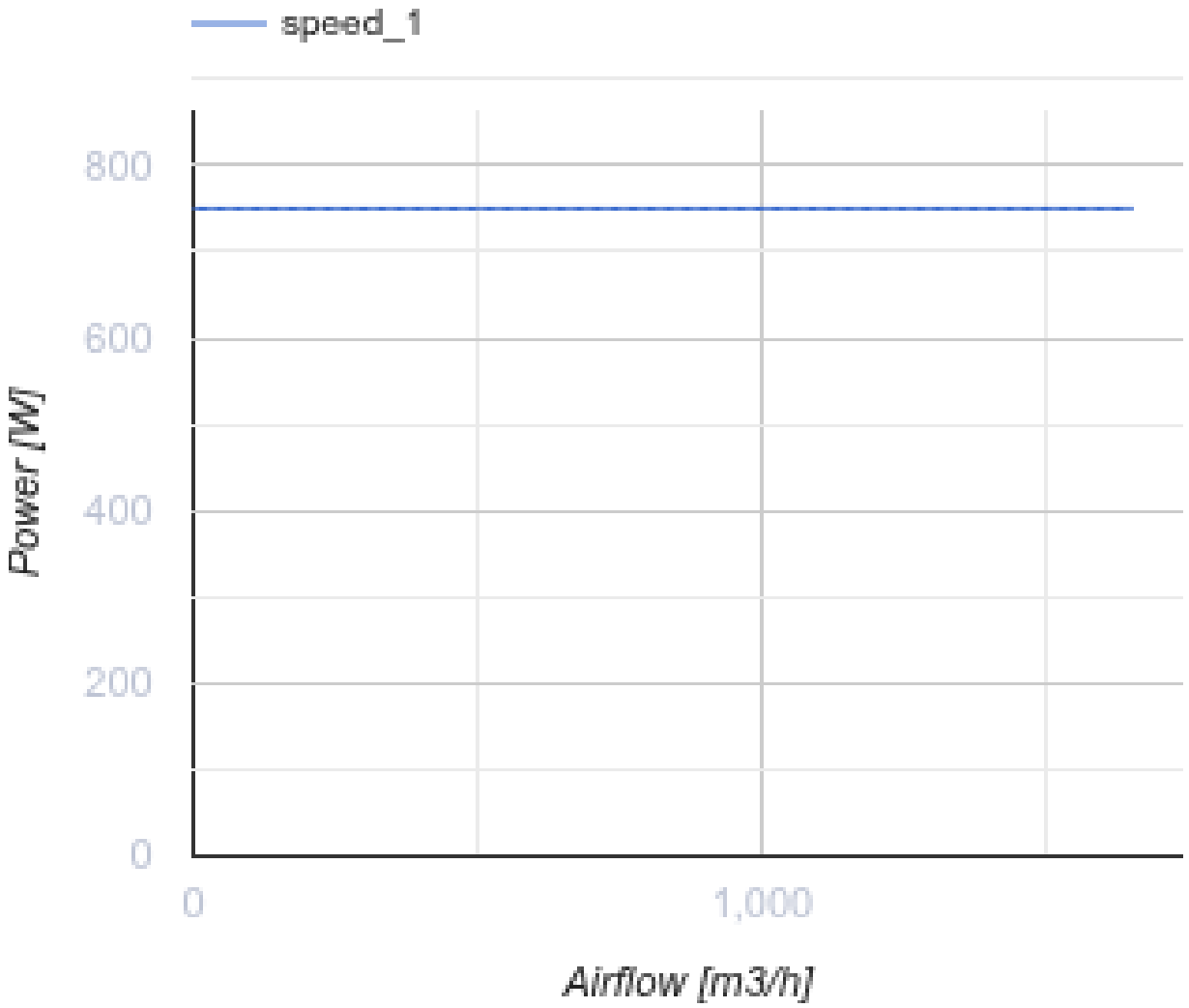

Dimensions

Ø D	B	B1	H	H1	L	L1	L2	L3	L4
200	485	365	600	425	625	600	570	515	235

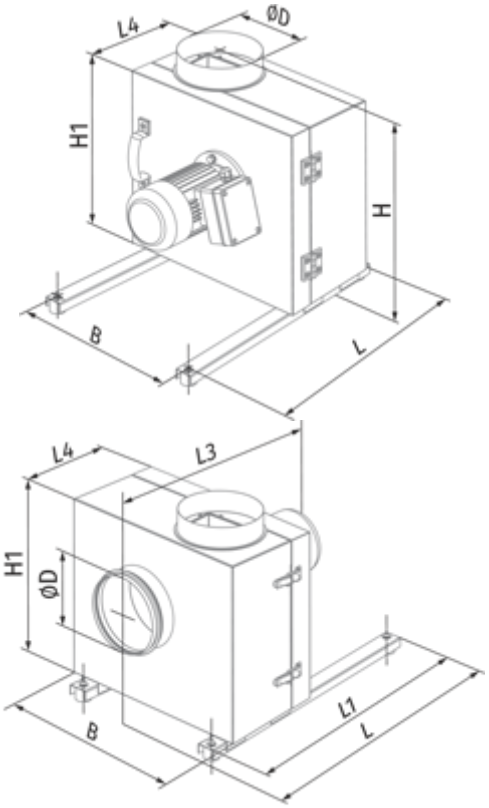
L4
ØD
H1
H
B
L
L4
L3
H1
ØD
B
L1
L

Ecodesign

Trademark	Blauberg
Model	Iso-K 200 4D
Type of ventilation unit	Unidirectional
Type of drive installed	External MSD or VSD
Type of heat recovery system	None
Nominal external pressure (Pa)	257
Maximum external leakage rates (%)	2.7
Static efficiency (%)	27.3
Declared typology	NRVU UVU
Effective electric power input (kW)	0.294
Sound power level (dB(A))	65