

Iso-K 160 4D

Kitchen inline fans in sound-insulated casings with operational temperature of 120 °C

• Sound-insulated casing
• Impeller type: Centrifugal impeller with forward curved blades
• Casing material: Galvanized steel

	Unit of measurement	Iso-K 160 4D
Phases	-	3
Maximum supply voltage	V	400
Minimum supply voltage	V	400
Power supply frequency	Hz	50
Maximum airflow	m³/h	730
Weight	kg	17
Transported air temperature (max)	°C	120
Transported air temperature (min)	°C	-20
Ingress protection rating	-	IP54
Impeller material	-	Galvanized steel
Size	mm	160

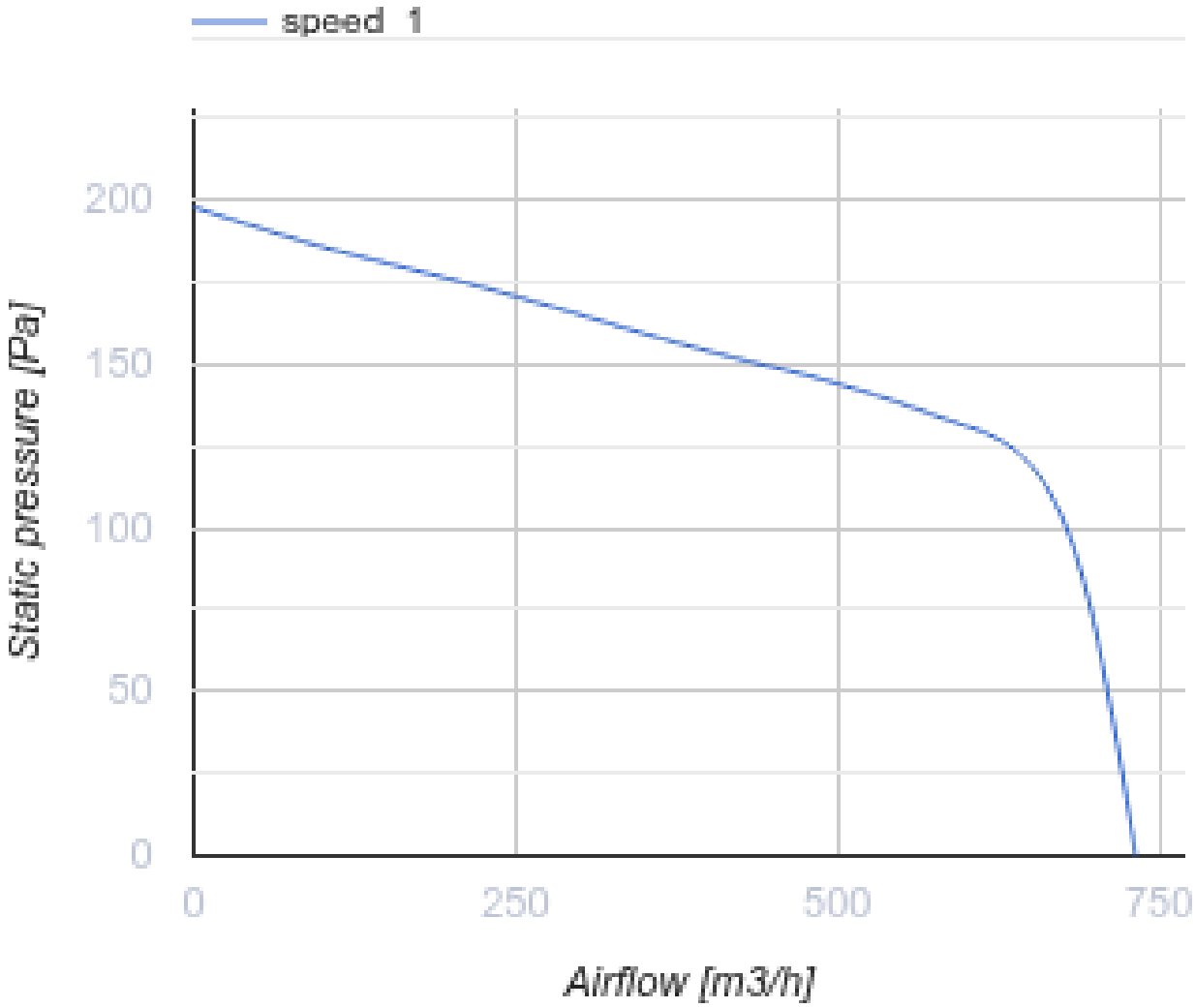
speed 1
Static pressure [Pa]
200
150
100
50
0
0
250
500
750
Airflow [m3/h]

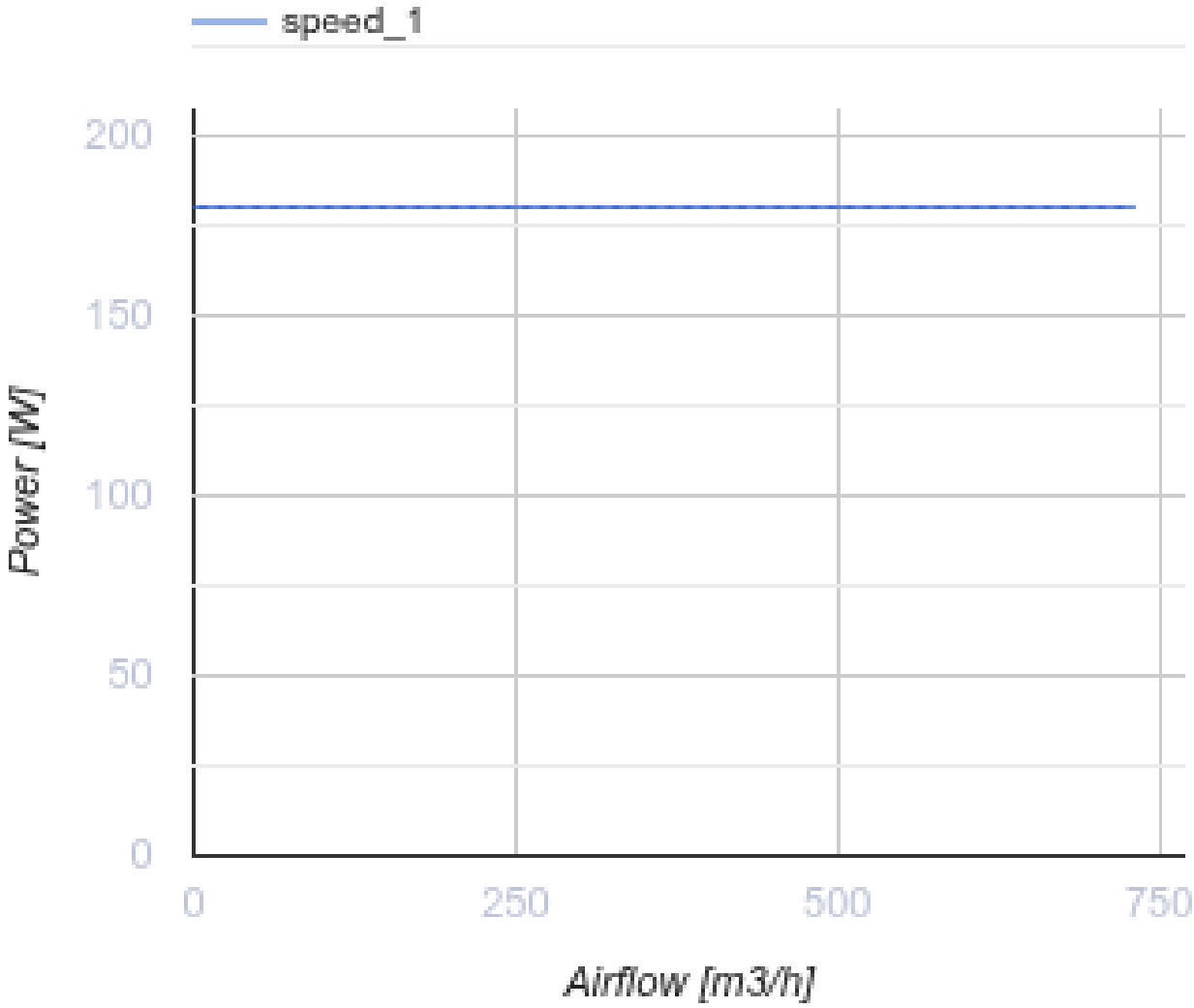

Dimensions

Ø D	B	B1	H	H1	L	L1	L2	L3	L4
160	410	330	540	365	525	500	470	475	205

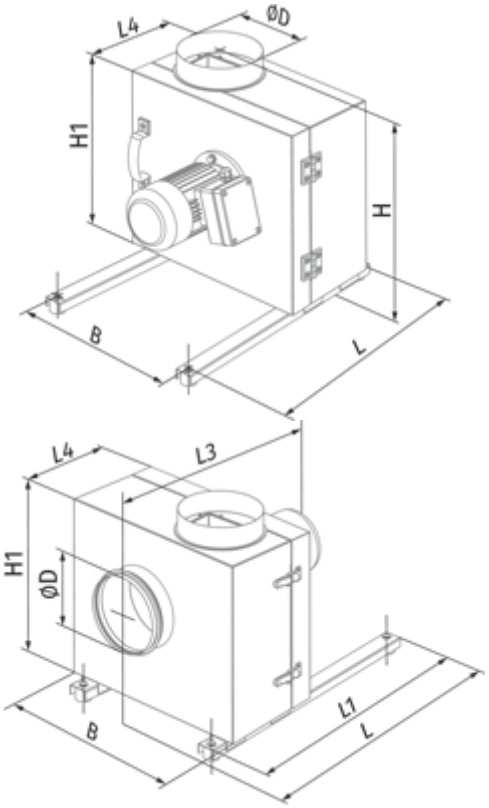
L4
ØD
H1
H
B
L
L4
L3
H1
ØD
B
L1
L