

Iso Box-F 200 ES

Centrifugal inline fans with forward curved blades in sound-insulated casings with filters

- Sound-insulated casing
- Impeller type: Centrifugal impeller with forward curved blades
- Casing material: Coated steel
- Installation in any position

	Unit of measurement	Iso Box-F 200 ES	
Speed	-	1	2
Phases	-	1	
Minimum supply voltage	V	230	
Maximum supply voltage	V	230	
Power supply frequency	Hz	50	60
Maximum airflow	m³/h	640	645
Weight	kg	20.5	
Transported air temperature (max)	°C	40	
Transported air temperature (min)	°C	-25	
Ingress protection rating	-	IPX4	
Ingress protection rating of the drive	-	IP44	
Impeller material	-	Plastic	

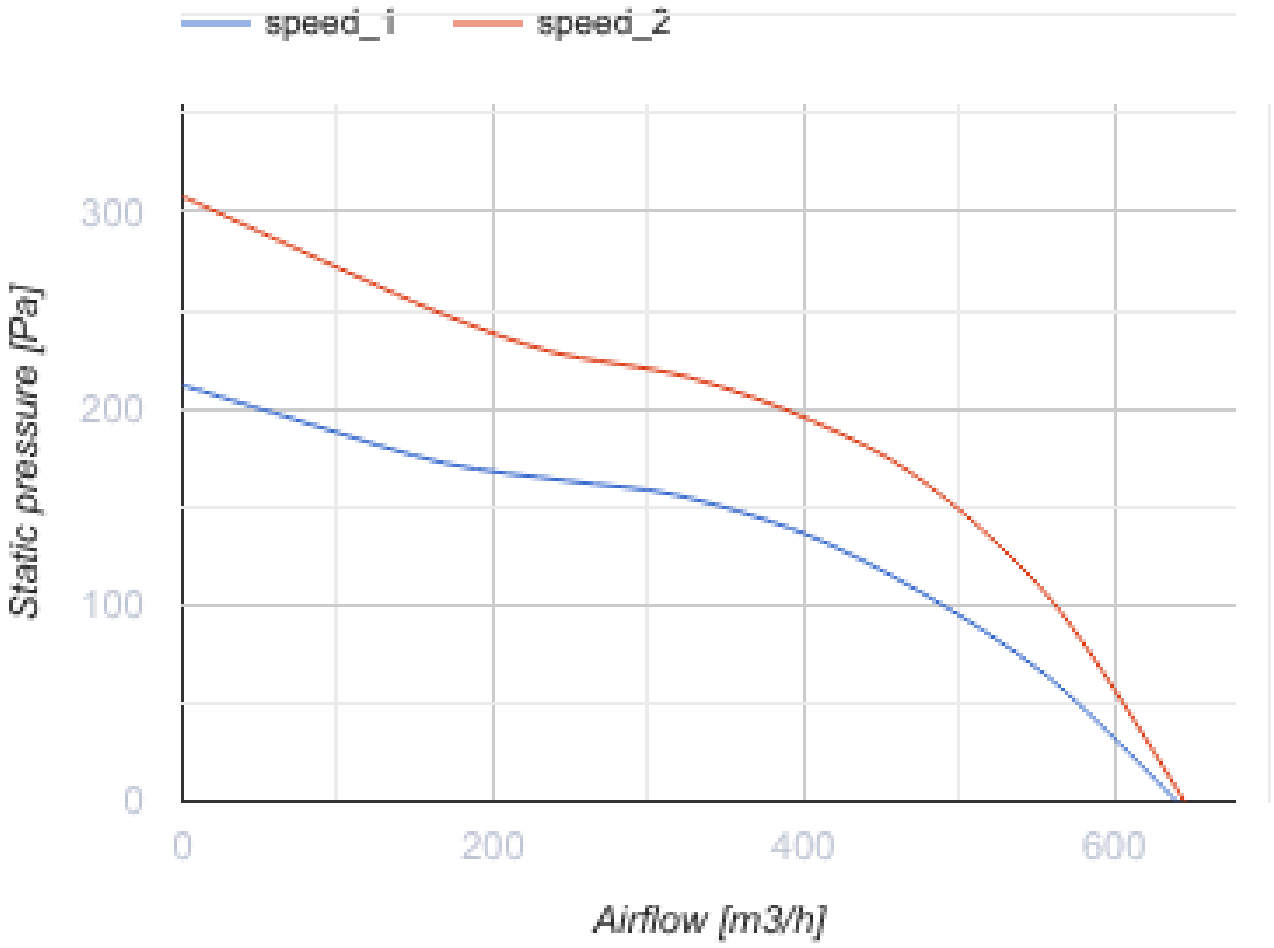
speed_1
speed_2
300
200
100
0
Static pressure [Pa]
0
200
400
600
Airflow [m3/h]

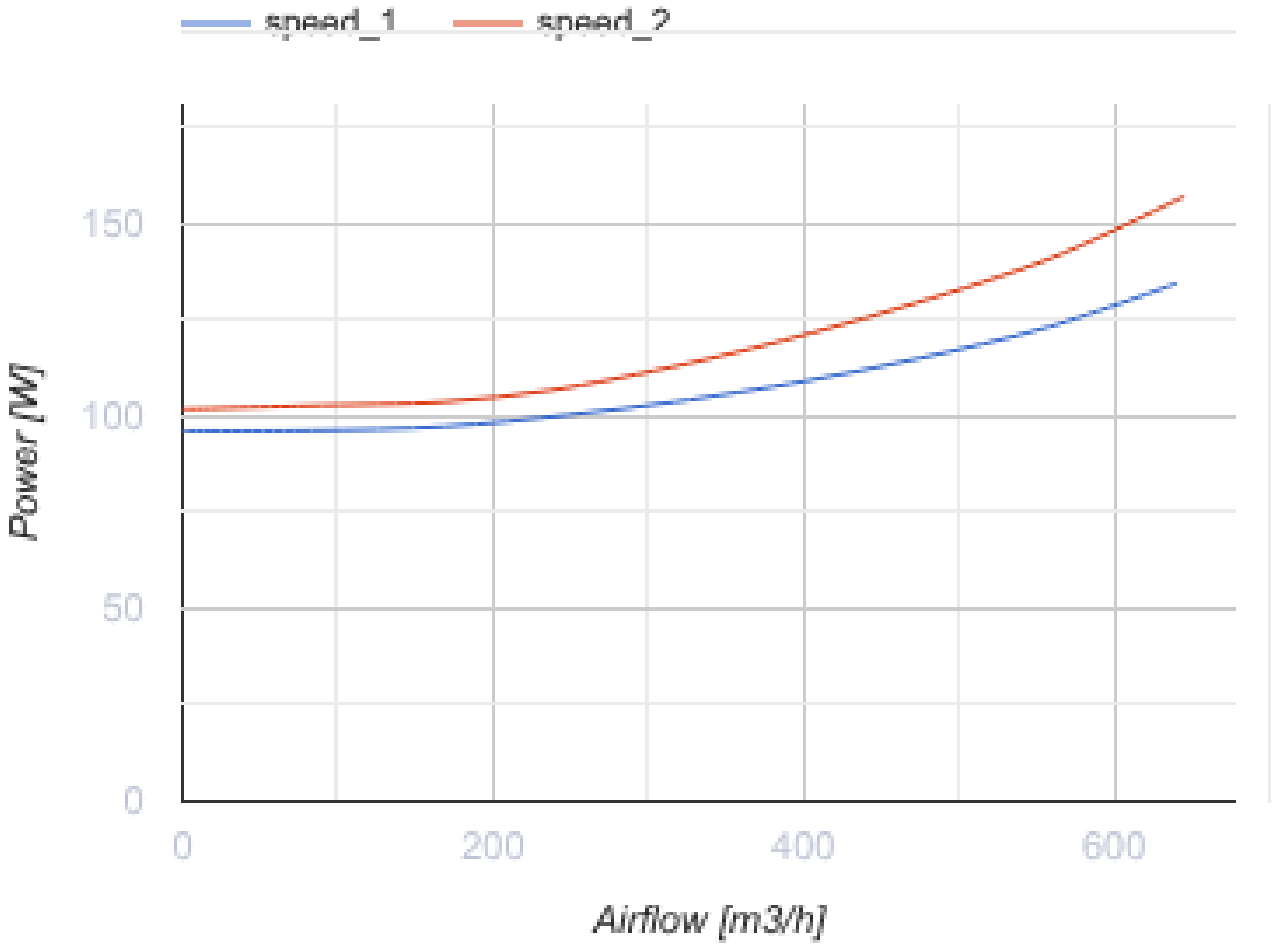

Dimensions

Ø D	L	H	B	L1	B1	L2	B2
200	785	300	658	855	751	730	702

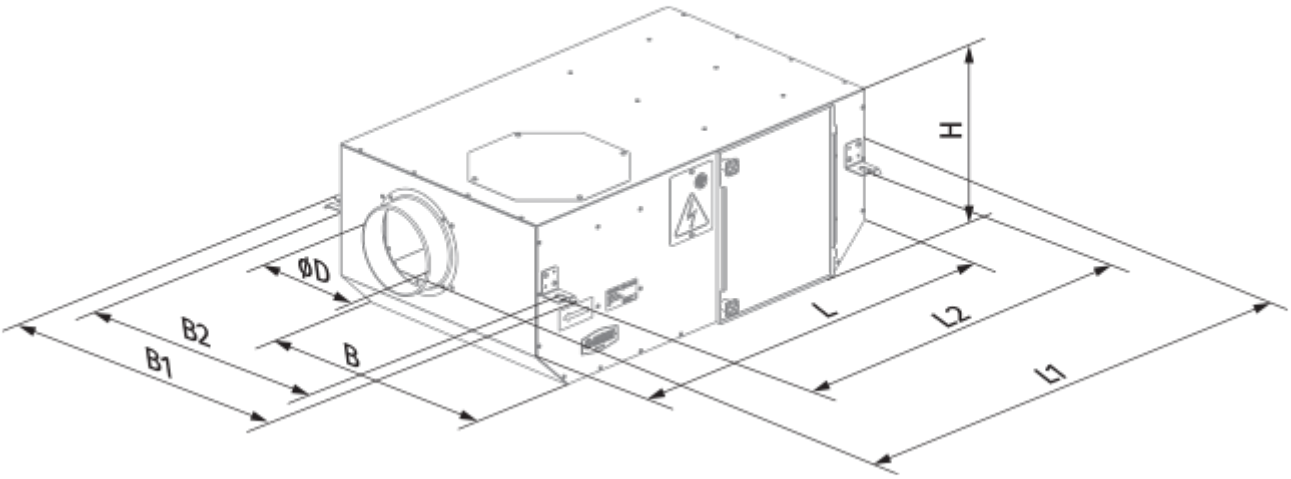

Accessories

Speed controllers

Name	Photo	Description
CDT E1.8		Thyristor speed controller