

Iso Box-F 150 G4/F8 L V2

Centrifugal inline fans with forward curved blades in sound-insulated casings with filters

- Sound-insulated casing
- Impeller type: Centrifugal impeller with backward curved blades
- Casing material: Coated steel
- Installation in any position

	Unit of measurement	Iso Box-F 150 G4/F8 L V2	
Speed	-	1	2
Phases	-	1	
Minimum supply voltage	V	230	
Maximum supply voltage	V	230	
Power supply frequency	Hz	50	
Maximum airflow	m³/h	215	310
Weight	kg	14.17	
Transported air temperature (max)	°C	40	
Transported air temperature (min)	°C	-25	
Ingress protection rating	-	IPX4	
Ingress protection rating of the drive	-	IP44	
Impeller material	-	Plastic	

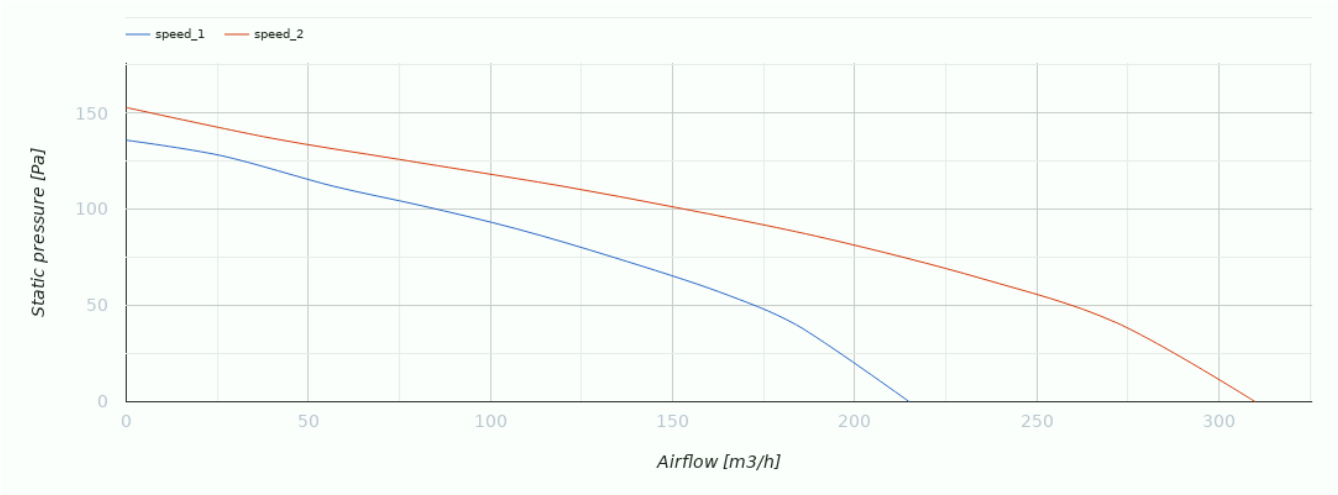

Dimensions

ØD	L	H	B	L1	B1	L2	B2
150	735	300	440	835	533	680	483

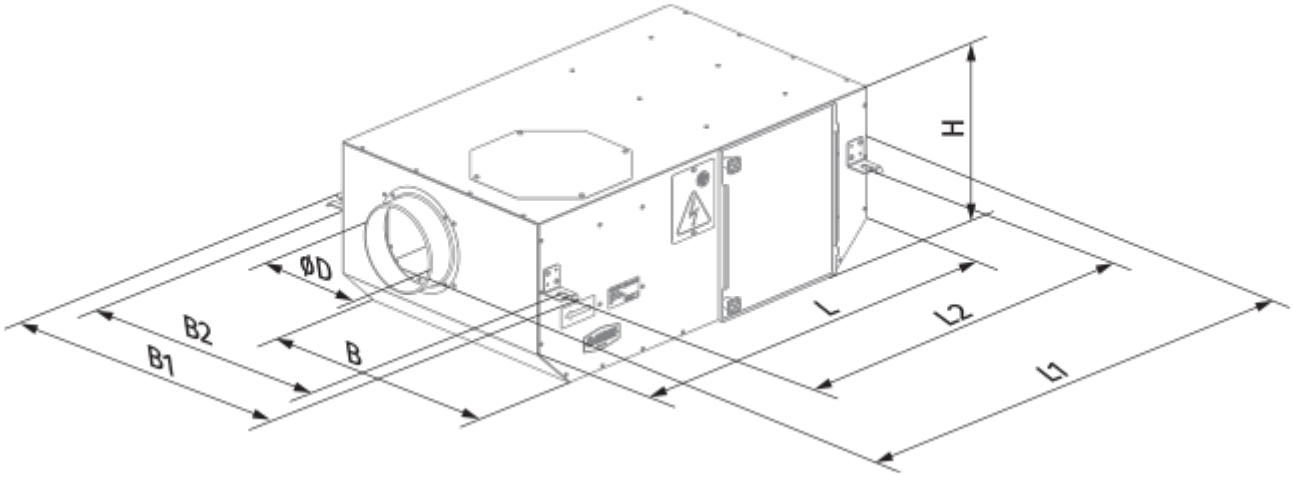

Ecodesign

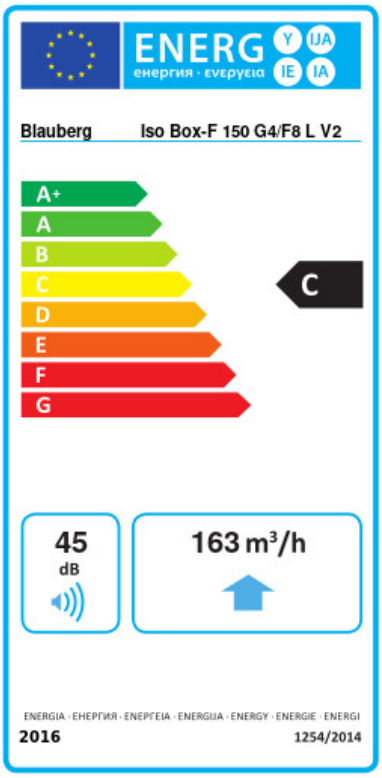

Trademark	Blauberg					
Model	Iso Box-F 150 G4/F8 L V2					
Specific energy consumption (SEC) (kWh/(m²/a))	Cold		Average		Warm	
	-50.7	A+	-23.6	C	-8.1	F
Type of ventilation unit	Unidirectional					
Type of drive installed	2-speed					
Type of heat recovery system	None					
Maximum flow rate (m³/h)	163					
Electric power input (W)	41					
Reference flow rate (m³/s)	0.049					
Reference pressure difference (Pa)	50					
Specific power input (SPI) (W/(m³/h))	0.252					
Control typology	Local demand control					
Maximum external leakage rates (%)	2.7					
Declared typology	RVU UVU					
Sound power level (dB(A))	45					
The annual electricity consumption (AEC) (kWh/a)	Cold		Average		Warm	
	188		188		188	
The annual heating saved (AHS) (kWh/a)	Cold		Average		Warm	
	5536		2830		1280	

Accessories

Speed controllers

Name	Photo	Description
CDT E1.8		Thyristor speed controller

Speed control switches

Name	Photo	Description

CDP-2/10		Multi-speed switch