

Iso Box-F 150 G4/Carbon

Centrifugal inline fans with forward curved blades in sound-insulated casings with filters

- Sound-insulated casing
- Impeller type: Centrifugal impeller with backward curved blades
- Casing material: Coated steel
- Installation in any position

	Unit of measurement	Iso Box-F 150 G4/Carbon
Phases	-	1
Maximum supply voltage	V	230
Minimum supply voltage	V	230
Power supply frequency	Hz	50
Maximum airflow	m^3/h	440
Transported air temperature (max)	°C	40
Transported air temperature (min)	°C	-25
Ingress protection rating	-	IPX4
Ingress protection rating of the drive	-	IP44
Impeller material	-	Plastic

Dimensions

∅ D	L	H	B	L1	B1	L2	B2
150	735	300	440	835	533	680	483

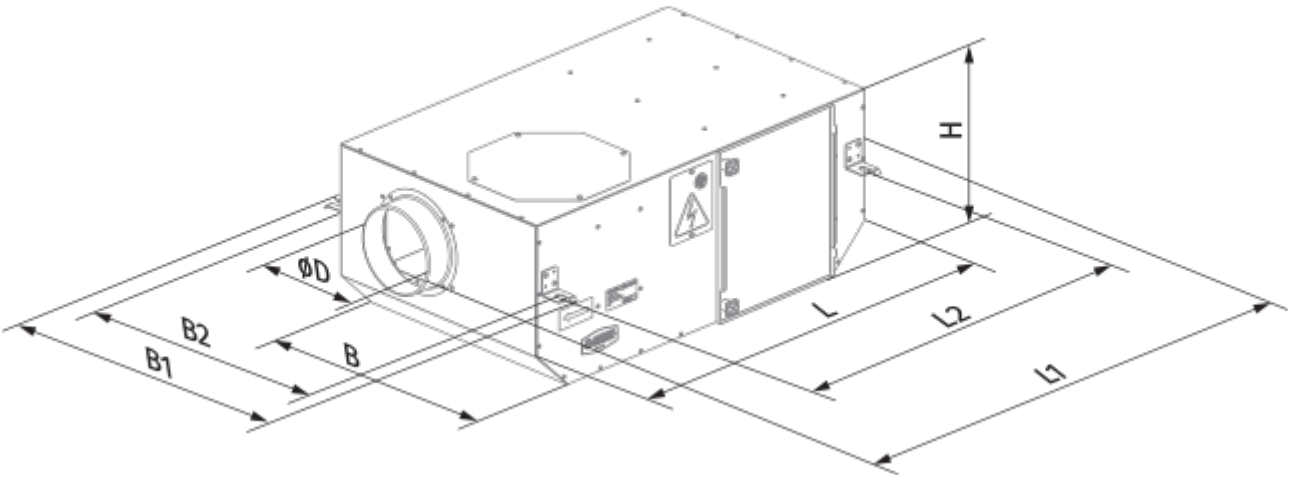

Accessories

Speed controllers

Name	Photo	Description
CDT E1.8		Thyristor speed controller

Speed control switches

Name	Photo	Description
CDP-2/10		Multi-speed switch