

Iso Box-F 150 ES V2

Centrifugal inline fans with forward curved blades in sound-insulated casings with filters

- Sound-insulated casing
- Impeller type: Centrifugal impeller with forward curved blades
- Casing material: Coated steel
- Installation in any position

	Unit of measurement	Iso Box-F 150 ES V2	
Speed	-	1	2
Phases	-	1	
Minimum supply voltage	V	230	
Maximum supply voltage	V	230	
Power supply frequency	Hz	50	
Maximum airflow	m³/h	320	430
Weight	kg	18.5	
Transported air temperature (max)	°C	40	
Transported air temperature (min)	°C	-25	
Ingress protection rating	-	IPX4	
Ingress protection rating of the drive	-	IP44	
Impeller material	-	Plastic	

Dimensions

Ø D	L	H	B	L1	B1	L2	B2
150	785	300	458	855	551	730	502

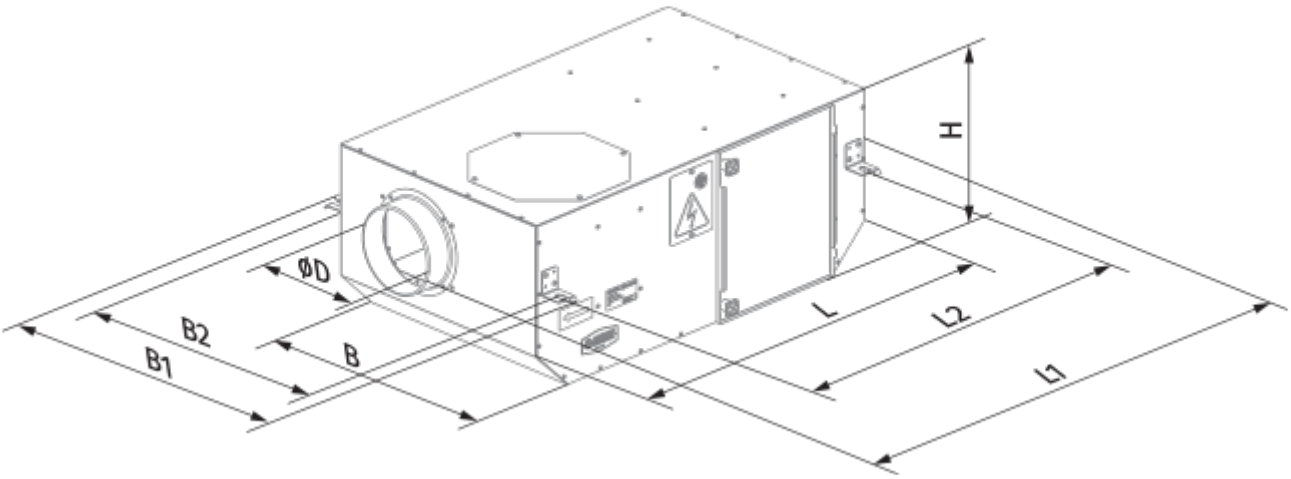

Accessories

Speed control switches

Name	Photo	Description
CDP-2/10		Multi-speed switch