

# Iso Box-F 100 G4/H13/Carbon

Centrifugal inline fans with forward curved blades in sound-insulated casings with filters

- Sound-insulated casing
- Impeller type: Centrifugal impeller with backward curved blades
- Casing material: Coated steel
- Installation in any position

| | Unit of measurement | Iso Box-F 100 G4/H13/Carbon |
|---|---|---|
| Phases | - | 1 |
| Maximum supply voltage | V | 230 |
| Minimum supply voltage | V | 230 |
| Power supply frequency | Hz | 50 |
| Maximum airflow | m³/h | 190 |
| Transported air temperature (max) | °C | 40 |
| Transported air temperature (min) | °C | -25 |
| Ingress protection rating | - | IPX4 |
| Ingress protection rating of the drive | - | IP44 |
| Impeller material | - | Plastic |

## Dimensions

| Ø D | L | H | B | L1 | B1 | L2 | |
|---|---|---|---|---|---|---|---|
| 100 | 705 | 250 | 415 | 805 | 508 | 650 | 458 |

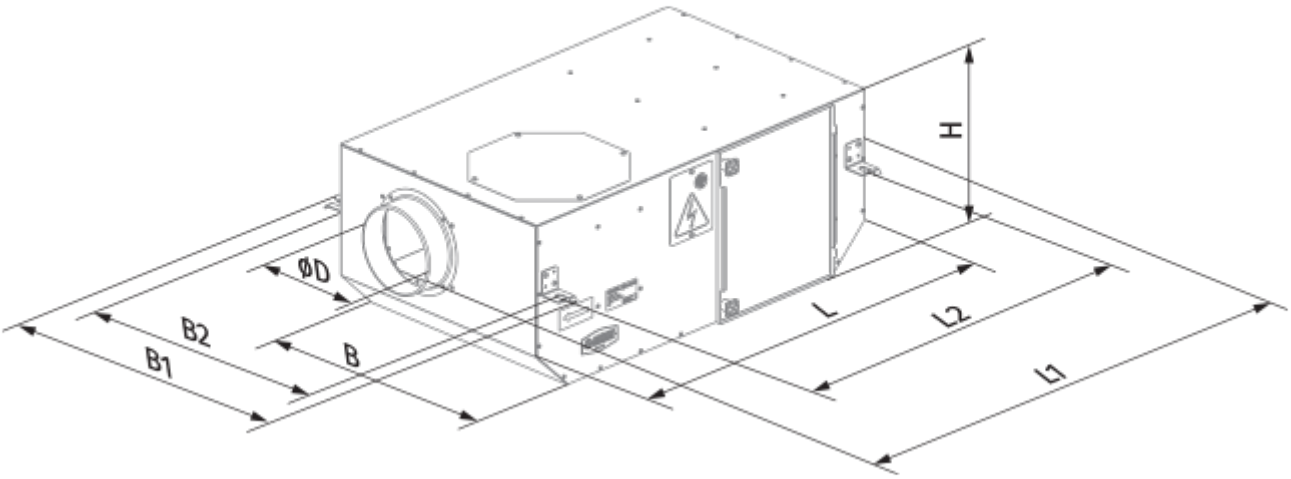


## Accessories

### Speed controllers

| Name | Photo | Description |
|---|---|---|
| CDT E1.8 |  | Thyristor speed controller |

### Speed control switches

| Name | Photo | Description |
|---|---|---|
| CDP-2/10 |  | Multi-speed switch |