

Iso-B 250

Centrifugal inline fans with backward curved blades in sound-insulated casings

- Sound-insulated casing
- Impeller type: Centrifugal impeller with backward curved blades
- Casing material: Galvanized steel
- Installation in any position

	Unit of measurement	Iso-B 250
Phases	-	1
Maximum supply voltage	V	240
Minimum supply voltage	V	220
Power supply frequency	Hz	50/60
Maximum airflow	m^3/h	1300
Weight	kg	12.5
Transported air temperature (max)	°C	50
Transported air temperature (min)	°C	-25
Ingress protection rating	-	IPX4
Impeller material	-	Plastic

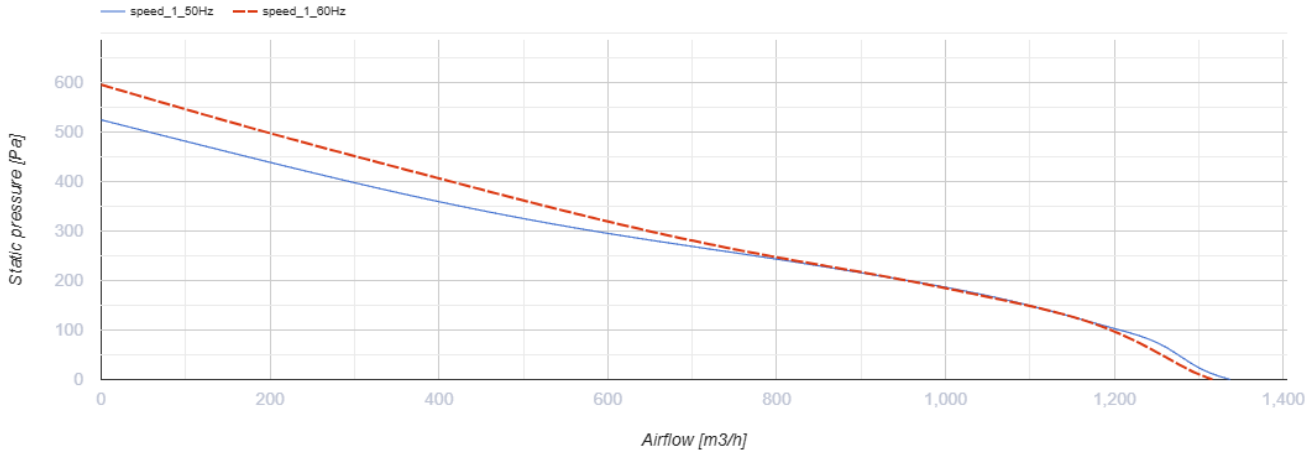

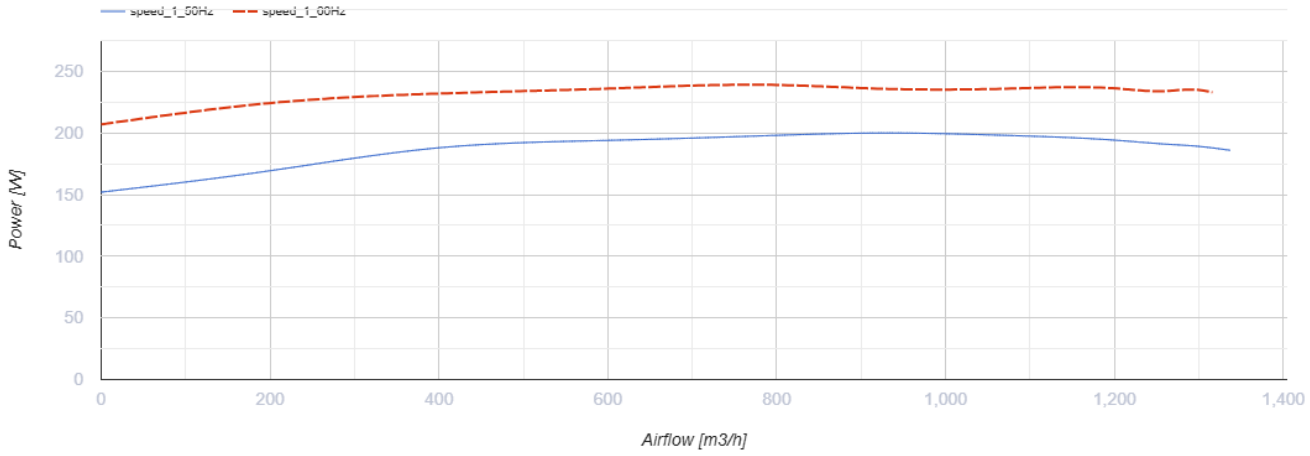

Dimensions

D	B	B1	H	L	L1	L2
249	432	368	287	588	506	480

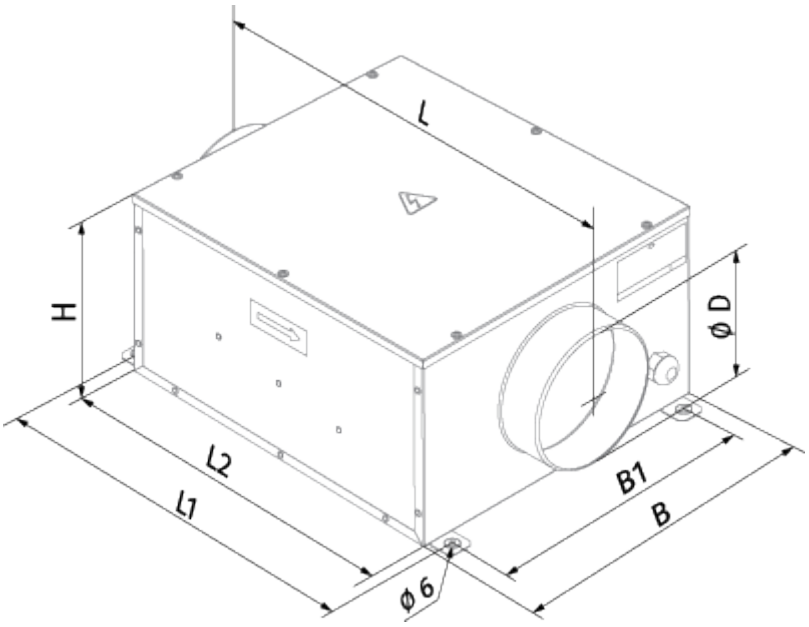
L
H
ϕ D
L2
L1
B1
B
ϕ 6

Ecodesign

Trademark	Blauberg
Model	Iso-B 250
Type of ventilation unit	Unidirectional
Type of drive installed	External MSD or VSD
Type of heat recovery system	None
Nominal external pressure (Pa)	258
Maximum external leakage rates (%)	2.7
Static efficiency (%)	27.5
Sound power level (dB(A))	61
Effective electric power input (kW)	0.196
Declared typology	NRVU UVU

Accessories

Speed controllers

Name	Photo	Description
CDT E1.8		Thyristor speed controller

Humidity sensors

Name	Photo	Description
HSE / HSI 1.5		Sensors
TE / TI 1.5		Timers
LSE / LSI 1.5		Sensors
IRSE / IRSI 1.5		Sensors