

# Iso 200-4E

Centrifugal inline fans with forward curved blades in sound-insulated casings

- Sound-insulated casing
- Impeller type: Centrifugal impeller with forward curved blades
- Casing material: Galvanized steel
- Installation in any position

| | Unit of measurement | Iso 200-4E |
|---|---|---|
| Phases | - | 1 |
| Minimum supply voltage | V | 230 |
| Maximum supply voltage | V | 230 |
| Power supply frequency | Hz | 50 |
| Maximum airflow | m³/h | 640 |
| Weight | kg | 8.25 |
| Transported air temperature (max) | °C | 40 |
| Transported air temperature (min) | °C | -25 |
| Ingress protection rating | - | IPX2 |
| Ingress protection rating of the drive | - | IP44 |
| Impeller material | - | Galvanized steel |

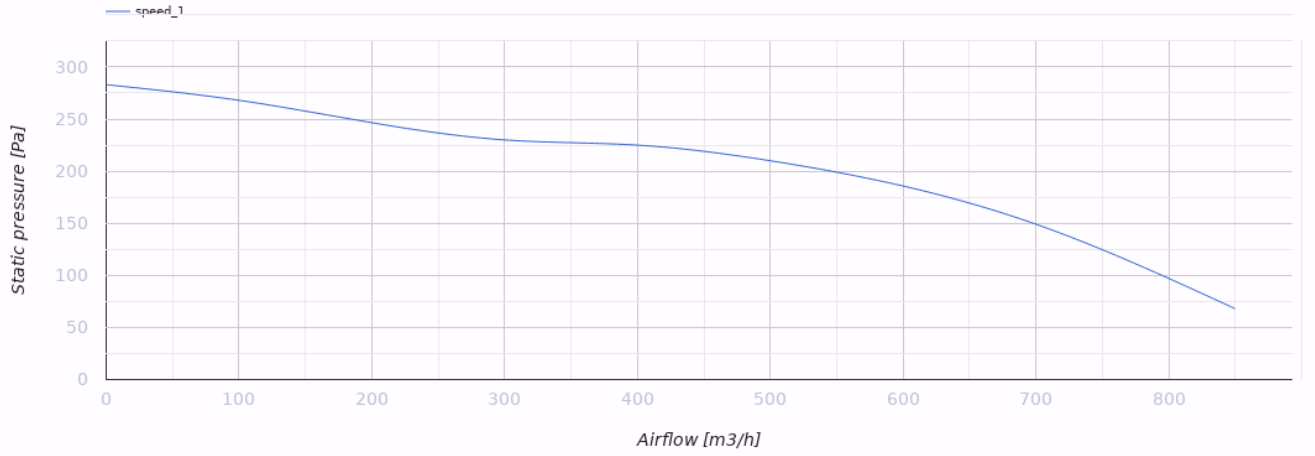


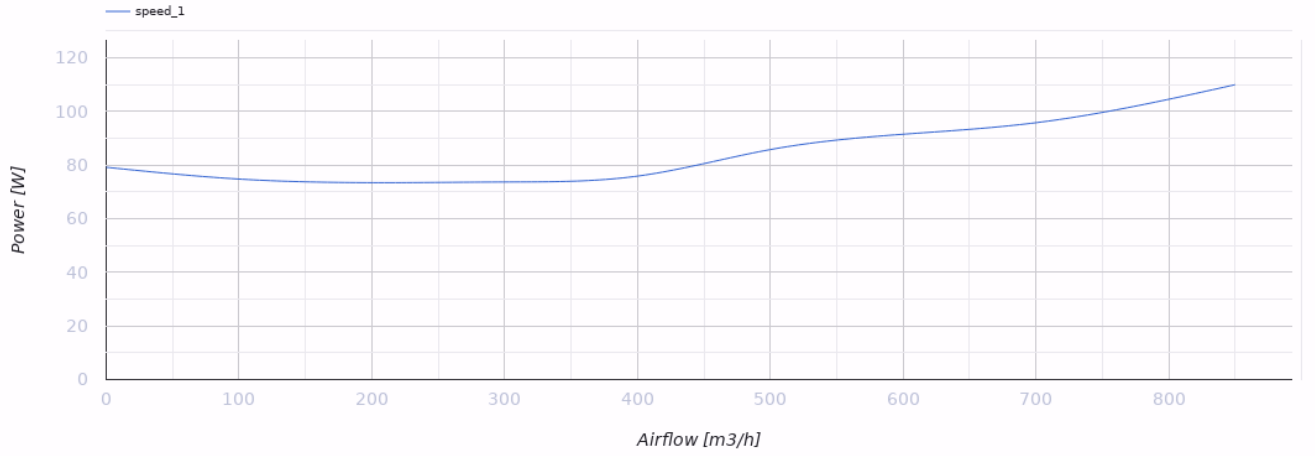


## Dimensions

| ØD | B | H | L | P |
|---|---|---|---|---|
| 198 | 282 | 408 | 445 | 48 |

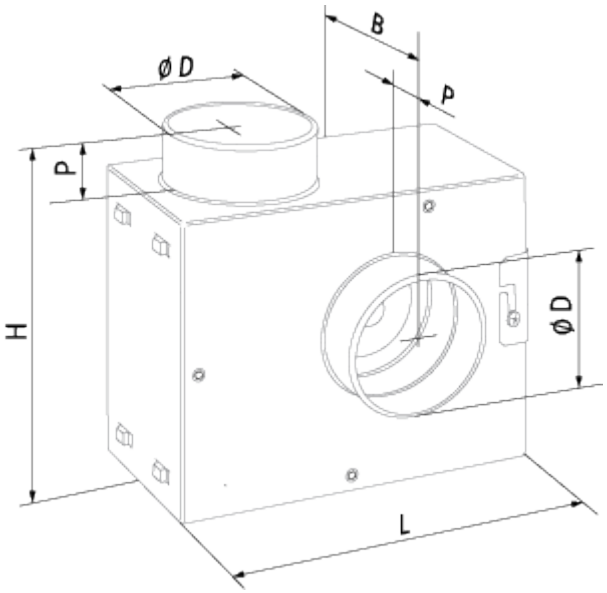
B
ØD
P
P
H
ØD
L

## Ecodesign

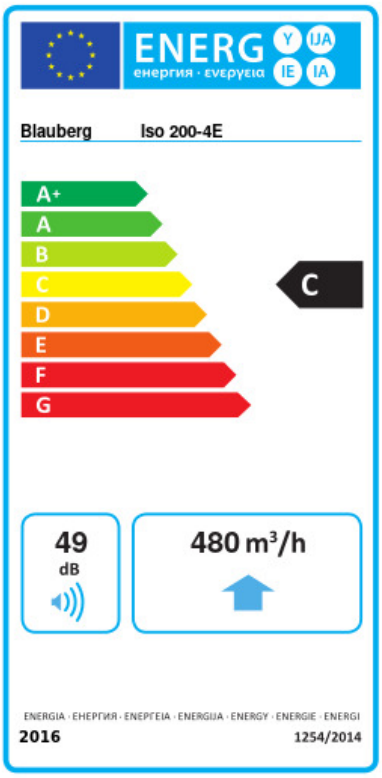


| Trademark | Blauberg | | | | | |
|---|---|---|---|---|---|---|
| Model | Iso 200-4E | | | | | |
| Specific energy consumption (SEC) (kWh/(m²/a)) | Cold | | Average | | Warm | |
| | -52.4 | A+ | -25.4 | C | -9.8 | F |
| Type of ventilation unit | Unidirectional | | | | | |
| Type of drive installed | Variable speed | | | | | |
| Type of heat recovery system | None | | | | | |
| Maximum flow rate (m³/h) | 480 | | | | | |
| Electric power input (W) | 107 | | | | | |
| Reference flow rate (m³/s) | 0.093 | | | | | |
| Reference pressure difference (Pa) | 50 | | | | | |
| Specific power input (SPI) (W/(m³/h)) | 0.223 | | | | | |
| Control typology | Local demand control | | | | | |
| Maximum external leakage rates (%) | 2.7 | | | | | |
| Declared typology | RVU UVU | | | | | |
| Sound power level (dB(A)) | 49 | | | | | |
| The annual electricity consumption (AEC) (kWh/a) | Cold | | Average | | Warm | |
| | 118 | | 118 | | 118 | |
| The annual heating saved (AHS) (kWh/a) | Cold | | Average | | Warm | |
| | 5536 | | 2830 | | 1280 | |

## Accessories

### Speed controllers

| Name | Photo | Description |
|---|---|---|
| CDT E1.8 |  | Thyristor speed controller |

### Humidity sensors

| Name | Photo | Description |
|---|---|---|
| HSE / HSI 1.5 |  | Sensors |

| | | |
|---|---|---|
| TE / TI 1.5 |  | Timers |
| LSE / LSI 1.5 |  | Sensors |
| IRSE / IRSI 1.5 |  | Sensors |