

Iso 100-2E

Centrifugal inline fans with forward curved blades in sound-insulated casings

- Sound-insulated casing
- Impeller type: Centrifugal impeller with forward curved blades
- Casing material: Galvanized steel
- Installation in any position

	Unit of measurement	Iso 100-2E
Phases	-	1
Minimum supply voltage	V	230
Maximum supply voltage	V	230
Power supply frequency	Hz	50
Maximum airflow	m³/h	425
Weight	kg	4.22
Transported air temperature (max)	°C	40
Transported air temperature (min)	°C	-25
Ingress protection rating	-	IPX2
Ingress protection rating of the drive	-	IP44
Impeller material	-	Galvanized steel

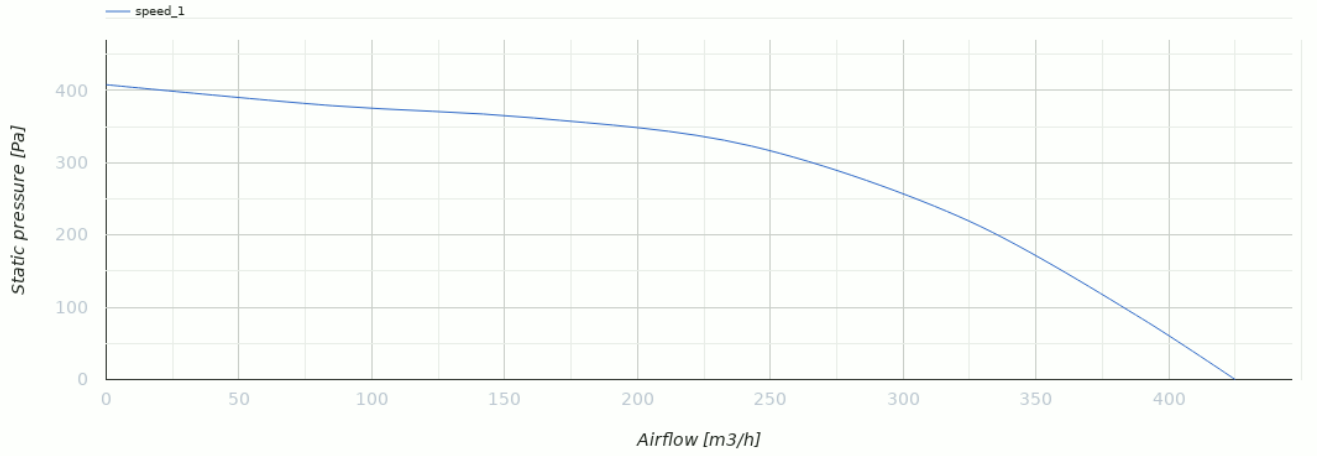

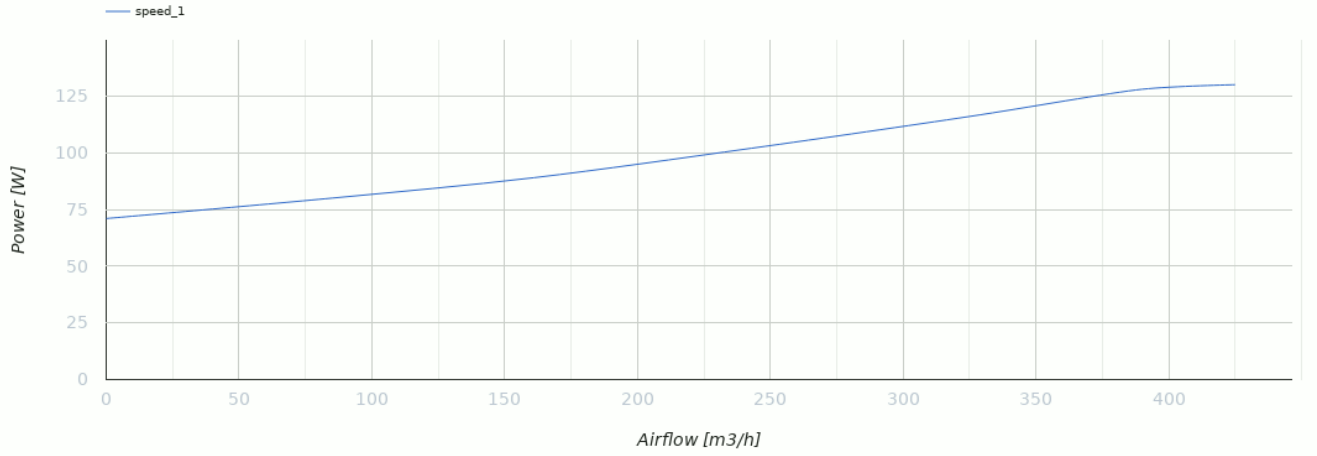

Dimensions

ØD	B	H	L	P
99	184	308	310	48

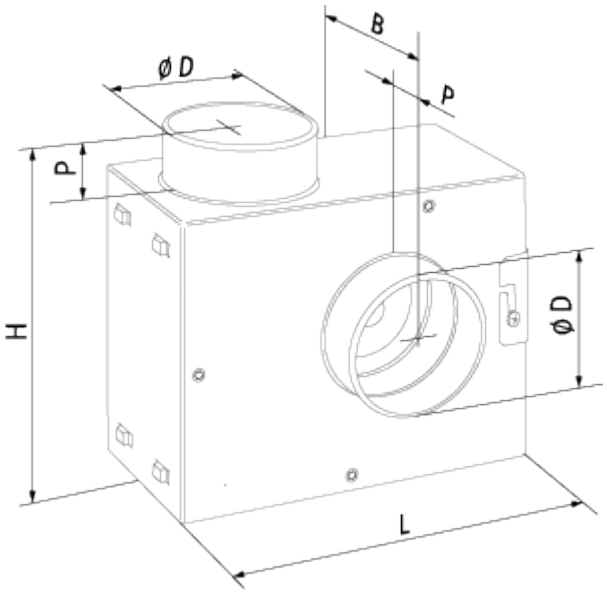
B
ØD
P
P
H
ØD
L

Ecodesign

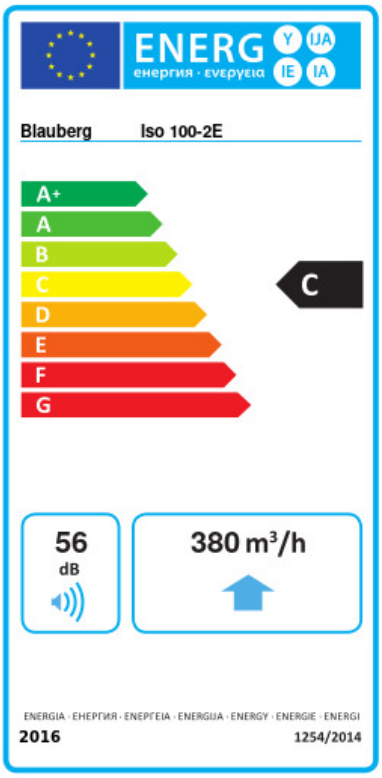

Trademark	Blauberg					
Model	Iso 100-2E					
Specific energy consumption (SEC) (kWh/(m²/a))	Cold		Average		Warm	
	-51	A+	-23.9	C	-8.4	F
Type of ventilation unit	Unidirectional					
Type of drive installed	Variable speed					
Type of heat recovery system	None					
Maximum flow rate (m³/h)	380					
Electric power input (W)	125					
Reference flow rate (m³/s)	0.074					
Reference pressure difference (Pa)	50					
Specific power input (SPI) (W/(m³/h))	0.329					
Control typology	Local demand control					
Maximum external leakage rates (%)	2.7					
Declared typology	RVU UVU					
Sound power level (dB(A))	56					
The annual electricity consumption (AEC) (kWh/a)	Cold		Average		Warm	
	174		174		174	
The annual heating saved (AHS) (kWh/a)	Cold		Average		Warm	
	5536		2830		1280	

Accessories

Speed controllers

Name	Photo	Description
CDT E1.8		Thyristor speed controller

Humidity sensors

Name	Photo	Description
HSE / HSI 1.5		Sensors

TE / TI 1.5		Timers
LSE / LSI 1.5		Sensors
IRSE / IRSI 1.5		Sensors