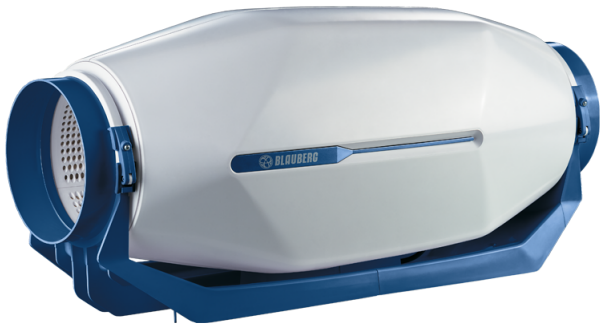

inWave 150/160 G1

Mixed-flow inline fans in sound-insulated casings

- Sound-insulated casing
- Control: Speed controller
- Impeller type: Mixed-flow
- Casing material: Polypropylene
- Cable with mains plug
- Temperature sensor: Remote

	Unit of measurement	inWave 150/160 G1		
Speed	-	1	2	3
Phases	-	1		
Minimum supply voltage	V	230		
Maximum supply voltage	V	230		
Power supply frequency	Hz	50		
Maximum airflow	m³/h	242	320	540
Weight	kg	5		
Transported air temperature (max)	°C	55		
Transported air temperature (min)	°C	-25		
Ambient air temperature min	°C	1		
Ambient air temperature max	°C	40		
Ingress protection rating	-	IPX4		
Ingress protection rating of the drive	-	IP20		
Impeller material	-	Plastic		

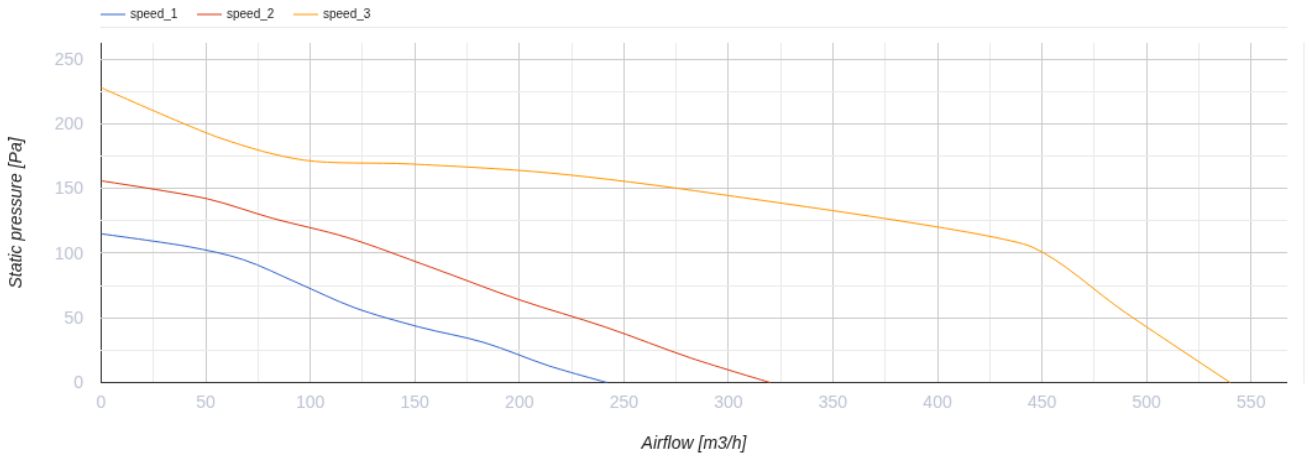

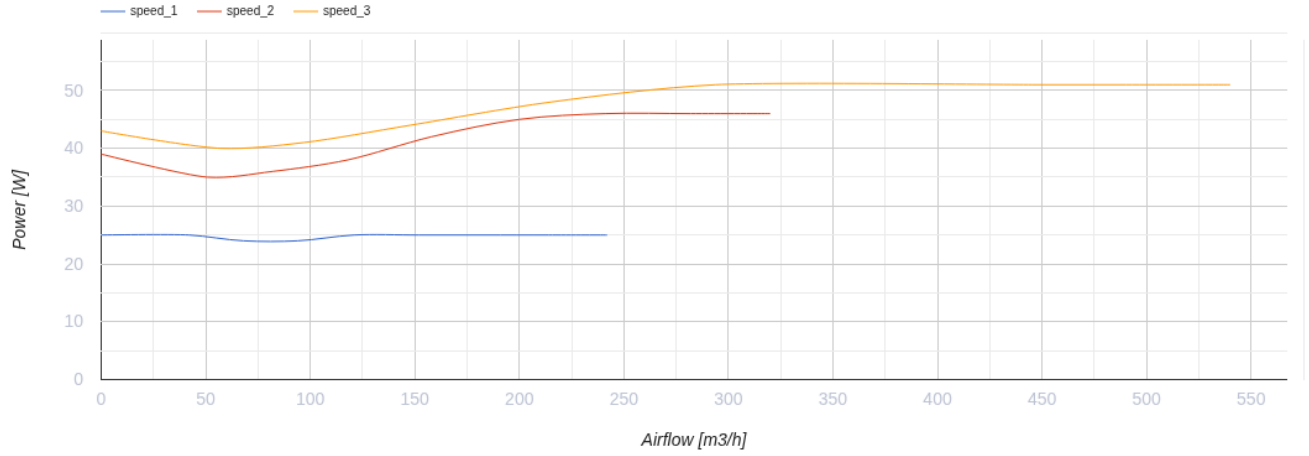

Dimensions

Ø D	W	L	H
149 (159)	253	606	273

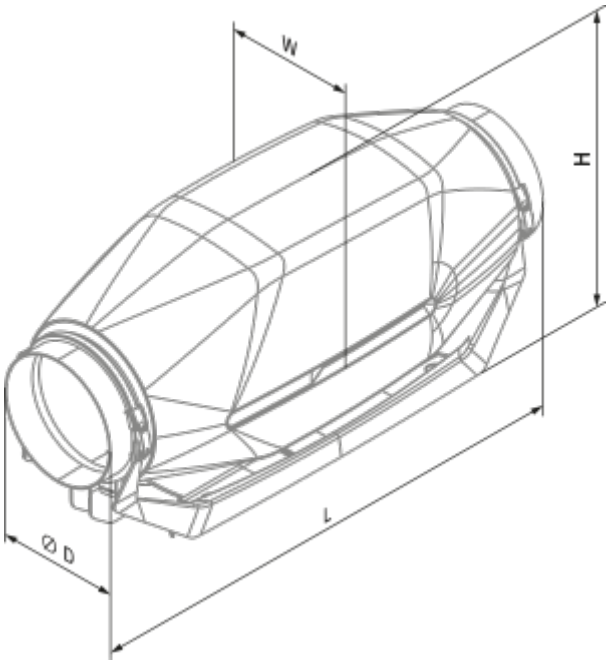

Accessories

For round ducts

Name	Photo	Description
SD 150/600		Silencers for round ducts
SD 150/900		Silencers for round ducts
SD 150/1200		Silencers for round ducts
SD 160/600		Silencers for round ducts
SD 160/900		Silencers for round ducts
SD 160/1200		Silencers for round ducts

For round ducts

Name	Photo	Description

KFBK 150		Filter boxes for round ducts
KFBK 160		Filter boxes for round ducts
KFBT 150 G4		Filter boxes with pocket filters for round ducts
KFBT 150 F5		Filter boxes with pocket filters for round ducts
KFBT 150 F7		Filter boxes with pocket filters for round ducts
KFBT 160 G4	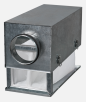	Filter boxes with pocket filters for round ducts
KFBT 160 F5		Filter boxes with pocket filters for round ducts
KFBT 160 F7		Filter boxes with pocket filters for round ducts

For round ducts

Name	Photo	Description
VRV 150		Backdraft dampers with spring for round ducts
VRV 160		Backdraft dampers with spring for round ducts
VKA 150		Air dampers for round ducts
VKA 160		Air dampers for round ducts

Water heaters

Name	Photo	Description

WKH 150-2		Duct water heaters for round ducts
WKH 150-4		Duct water heaters for round ducts
WKH 160-2		Duct water heaters for round ducts
WKH 160-4		Duct water heaters for round ducts

Electrical heaters

Name	Photo	Description
EKH 150-1.2		Duct electrical heaters for round ducts
EKH 150-1.7		Duct electrical heaters for round ducts
EKH 150-2.0		Duct electrical heaters for round ducts
EKH 150-2.4	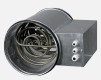	Duct electrical heaters for round ducts
EKH 150-3.4		Duct electrical heaters for round ducts
EKH 150-3.6		Duct electrical heaters for round ducts
EKH 150-5.1		Duct electrical heaters for round ducts
EKH 150-6.0		Duct electrical heaters for round ducts
EKH 160-1.2		Duct electrical heaters for round ducts

EKH 160-1.7		Duct electrical heaters for round ducts
EKH 160-2.0		Duct electrical heaters for round ducts
EKH 160-2.4		Duct electrical heaters for round ducts
EKH 160-3.4		Duct electrical heaters for round ducts
EKH 160-3.6		Duct electrical heaters for round ducts
EKH 160-5.1		Duct electrical heaters for round ducts
EKH 160-6.0		Duct electrical heaters for round ducts

Speed controllers

Name	Photo	Description
CDT E1.8		Thyristor speed controller
CDT1 E0.5		Multi-speed switches
CDTE E3.0 TP		Speed controllers

Speed control switches

Name	Photo	Description
CDP-3/5		Multi-speed switch