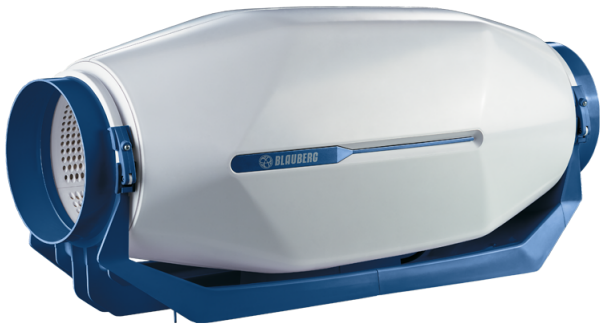

inWave 100/125 W

Mixed-flow inline fans in sound-insulated casings

- Sound-insulated casing
- Impeller type: Mixed-flow
- Casing material: Polypropylene
- Cable with mains plug
- Timer: Turn off timer

	Unit of measurement	inWave 100/125 W		
Speed	-	1	2	3
Phases	-	1		
Minimum supply voltage	V	230		
Maximum supply voltage	V	230		
Power supply frequency	Hz	50/60		
Maximum airflow	m³/h	173	240	320
Weight	kg	3.6		
Transported air temperature (max)	°C	55		
Transported air temperature (min)	°C	-25		
Ambient air temperature max	°C	40		
Ambient air temperature min	°C	1		
Ingress protection rating	-	IPX4		
Ingress protection rating of the drive	-	IP44		
Impeller material	-	Plastic		

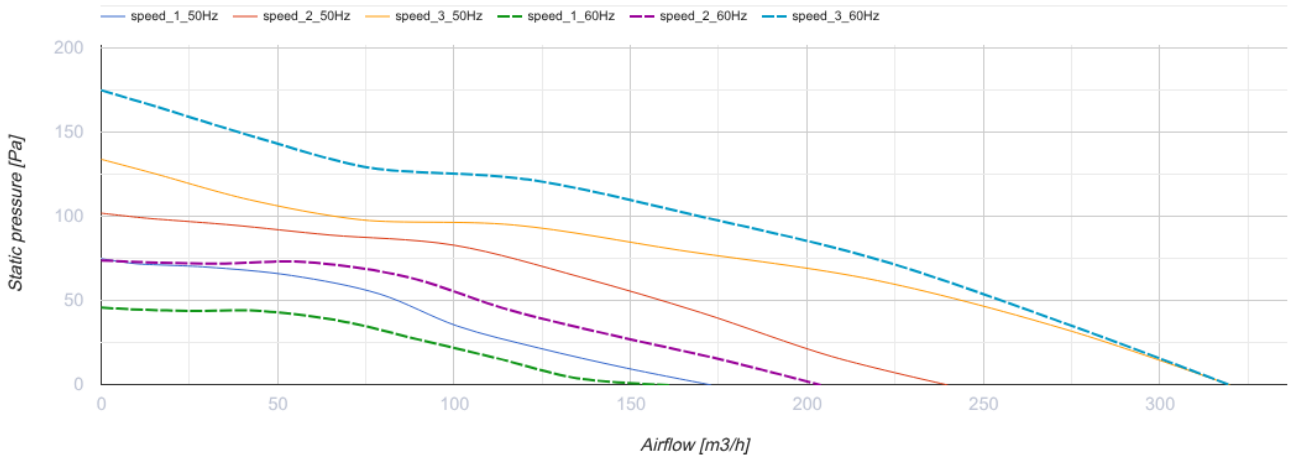

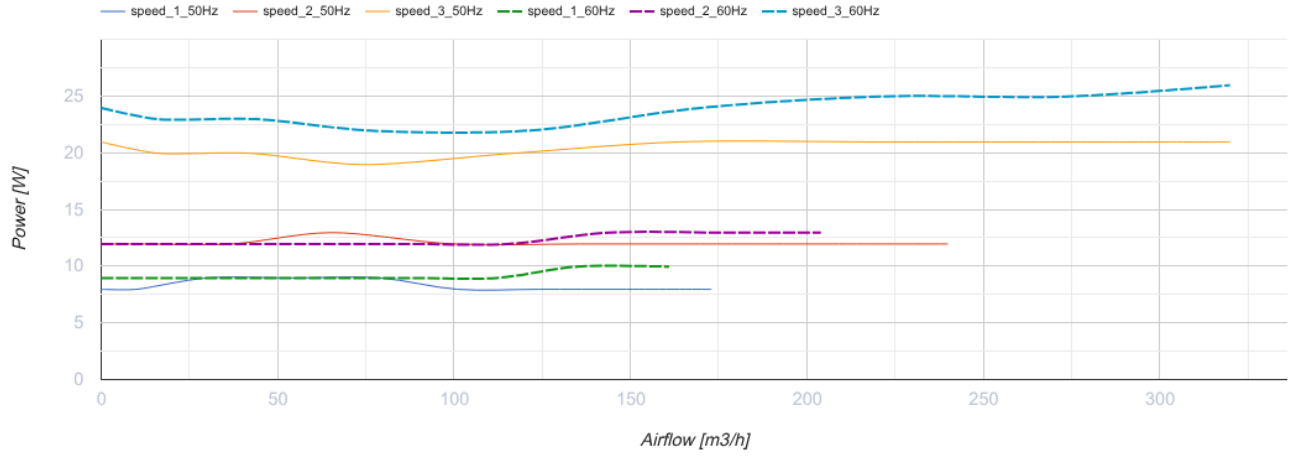

Dimensions

Ø D	H	L	W
125	224	502	207

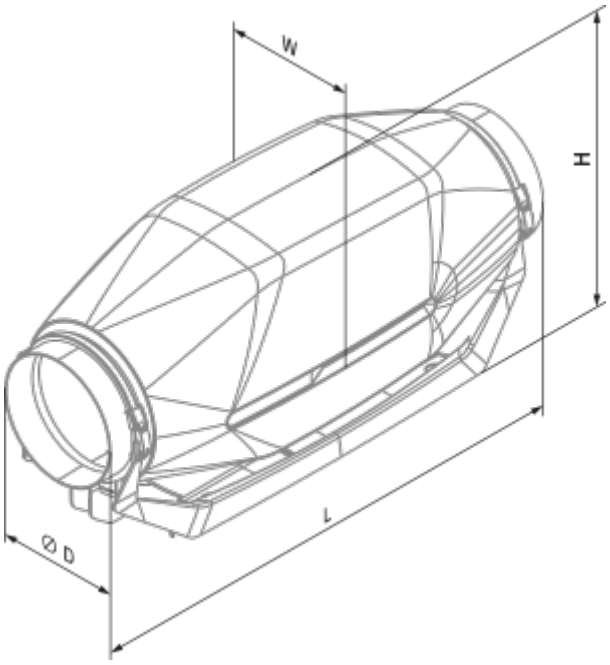
W
H
L
Ø D

Ecodesign

Trademark	Blauberg					
Model	inWave 100/125 W					
Specific energy consumption (SEC) (kWh/(m²/a))	Cold		Average		Warm	
	-54	A+	-26.9	B	-11.4	E
Type of ventilation unit	Unidirectional					
Type of drive installed	Variable speed					
Type of heat recovery system	None					
Maximum flow rate (m³/h)	320					
Electric power input (W)	34					
Reference flow rate (m³/s)	0.062					
Specific power input (SPI) (W/(m³/h))	0.106					
Control typology	Local demand control					
Maximum external leakage rates (%)	2.7					
Sound power level (dB(A))	28					
The annual electricity consumption (AEC) (kWh/a)	Cold		Average		Warm	
	56		56		56	
The annual heating saved (AHS) (kWh/a)	Cold		Average		Warm	
	5536		2830		1280	

Accessories

For round ducts

Name	Photo	Description
SD 125/600		Silencers for round ducts
SD 125/900		Silencers for round ducts
SD 125/1200		Silencers for round ducts

For round ducts

Name	Photo	Description

KFBK 125		Filter boxes for round ducts
KFBT 125 G4		Filter boxes with pocket filters for round ducts
KFBT 125 F5		Filter boxes with pocket filters for round ducts
KFBT 125 F7		Filter boxes with pocket filters for round ducts

For round ducts

Name	Photo	Description
VRV 125		Backdraft dampers with spring for round ducts
VKA 125		Air dampers for round ducts

Water heaters

Name	Photo	Description
WKH 125-2		Duct water heaters for round ducts
WKH 125-4		Duct water heaters for round ducts

Electrical heaters

Name	Photo	Description
EKH 125-0.6		Duct electrical heaters for round ducts
EKH 125-0.8		Duct electrical heaters for round ducts
EKH 125-1.2		Duct electrical heaters for round ducts

EKH 125-1.6		Duct electrical heaters for round ducts
EKH 125-2.4		Duct electrical heaters for round ducts

Speed controllers

Name	Photo	Description
CDT E1.8		Thyristor speed controller
CDT1 E0.5		Multi-speed switches
CDTE E3.0 TP		Speed controllers

Speed control switches

Name	Photo	Description
CDP-3/5		Multi-speed switch