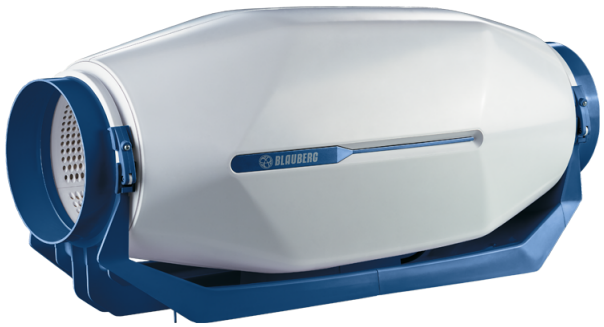

# inWave EC 100/125 FR1

Mixed-flow inline fans in sound-insulated casings with EC-motors

- Sound-insulated casing
- Control: Built-in speed controller
- Impeller type: Mixed-flow
- Casing material: Polypropylene
- Cable with mains plug

| | Unit of measurement | inWave EC 100/125 FR1 | |
|---|---|---|---|
| Phases | - | 1 | |
| Minimum supply voltage | V | 230 | |
| Maximum supply voltage | V | 230 | |
| Power supply frequency | Hz | 50 | |
| Maximum airflow | m³/h | 245 | 350 |
| Weight | kg | 3.6 | |
| Transported air temperature (max) | °C | 55 | |
| Transported air temperature (min) | °C | -25 | |
| Ambient air temperature max | °C | 40 | |
| Ambient air temperature min | °C | 1 | |
| Ingress protection rating | - | IPX4 | |
| Ingress protection rating of the drive | - | IP44 | |
| Impeller material | - | Plastic | |

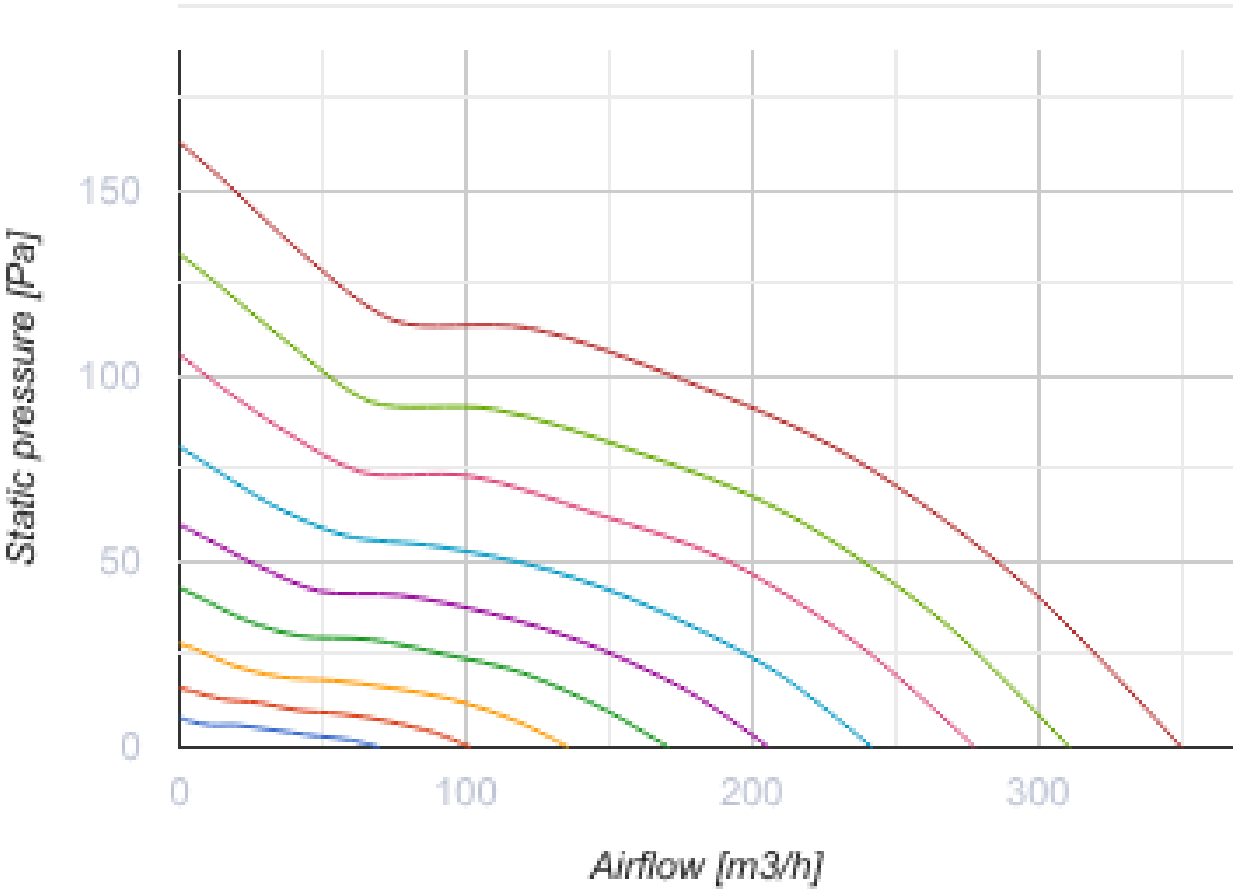
Static pressure [Pa]
150
100
50
0
0
100
200
300
Airflow [m3/h]

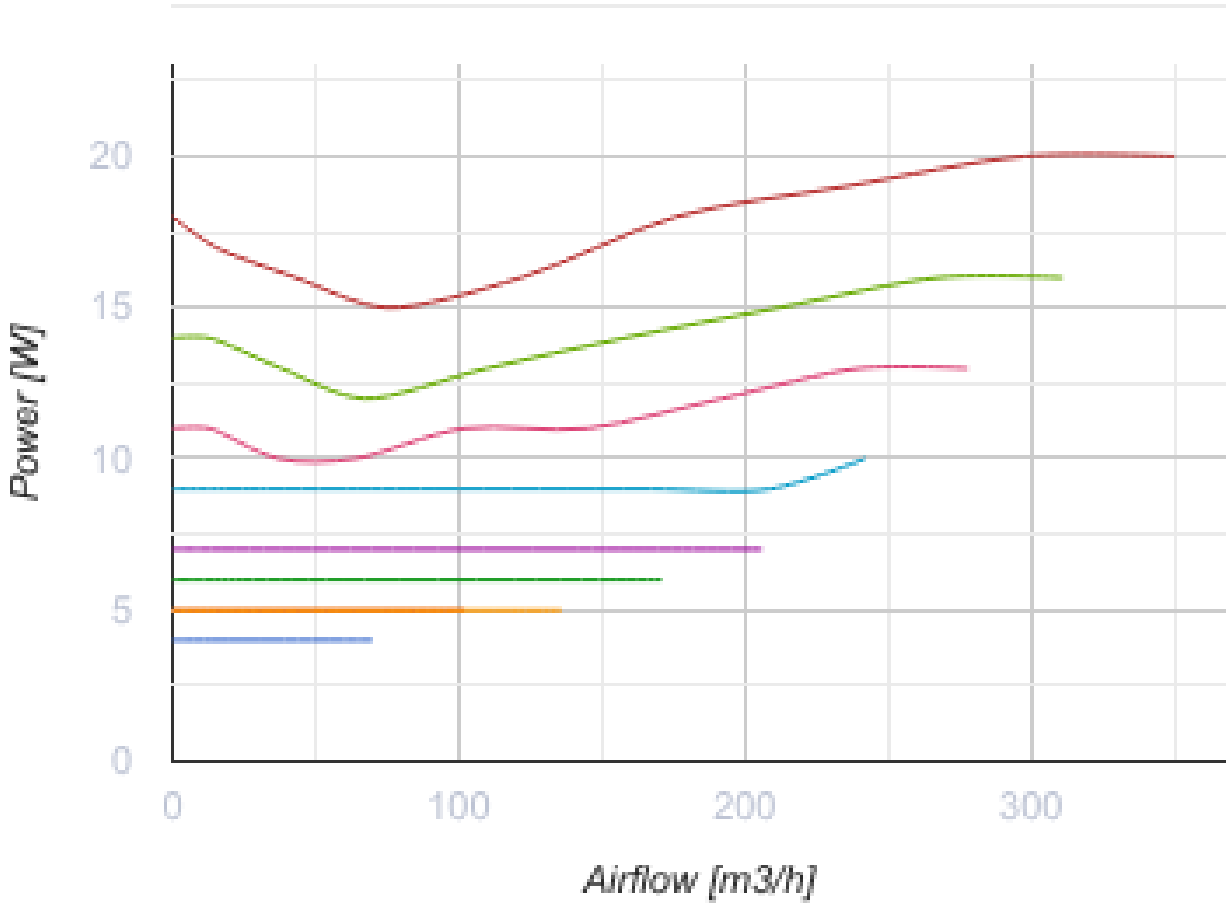


## Dimensions

| Ø D | W | L | H |
|---|---|---|---|
| 125 | 207 | 502 | 224 |

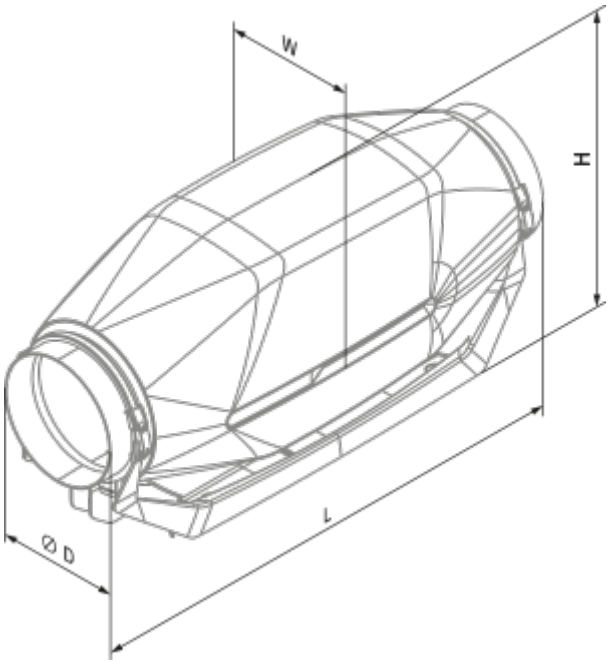
W
H
L
Ø D

## Ecodesign

| | | | | | | |
|---|---|---|---|---|---|---|
| Trademark | Blauberg | | | | | |
| Model | inWave EC 100/125 FR1 | | | | | |
| Specific energy consumption (SEC) (kWh/(m²/a)) | Cold | | Average | | Warm | |
| | -54.4 | A+ | -27.4 | B | -11.9 | E |
| Type of ventilation unit | Unidirectional | | | | | |
| Type of drive installed | Variable speed | | | | | |
| Type of heat recovery system | None | | | | | |
| Maximum flow rate (m³/h) | 176 | | | | | |
| Electric power input (W) | 18 | | | | | |
| Reference flow rate (m³/s) | 0.036 | | | | | |
| Reference pressure difference (Pa) | 50 | | | | | |
| Specific power input (SPI) (W/(m³/h)) | 0.07 | | | | | |
| Control typology | Local demand control | | | | | |
| Maximum external leakage rates (%) | 2.7 | | | | | |
| Sound power level (dB(A)) | 38 | | | | | |
| The annual electricity consumption (AEC) (kWh/a) | Cold | | Average | | Warm | |
| | 37 | | 37 | | 37 | |
| The annual heating saved (AHS) (kWh/a) | Cold | | Average | | Warm | |
| | 5536 | | 2830 | | 1280 | |

## Accessories

### For round ducts

| Name | Photo | Description |
|---|---|---|
| SD 125/600 |  | Silencers for round ducts |
| SD 125/900 |  | Silencers for round ducts |
| SD 125/1200 |  | Silencers for round ducts |

### For round ducts

| Name | Photo | Description |
|---|---|---|
| KFBK 125 |  | Filter boxes for round ducts |
| KFBT 125 G4 | 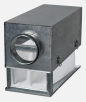 | Filter boxes with pocket filters for round ducts |
| KFBT 125 F5 |  | Filter boxes with pocket filters for round ducts |
| KFBT 125 F7 |  | Filter boxes with pocket filters for round ducts |

### For round ducts

| Name | Photo | Description |
|---|---|---|
| VRV 125 |  | Backdraft dampers with spring for round ducts |
| VKA 125 |  | Air dampers for round ducts |

### Water heaters

| Name | Photo | Description |
|---|---|---|
| WKH 125-2 |  | Duct water heaters for round ducts |
| WKH 125-4 |  | Duct water heaters for round ducts |

### Electrical heaters

| Name | Photo | Description |
|---|---|---|
| EKH 125-0.6 |  | Duct electrical heaters for round ducts |
| EKH 125-0.8 |  | Duct electrical heaters for round ducts |
| EKH 125-1.2 |  | Duct electrical heaters for round ducts |

| | | |
|---|---|---|
| EKH 125-1.6 |  | Duct electrical heaters for round ducts |
| EKH 125-2.4 |  | Duct electrical heaters for round ducts |

### EC motors regulators

| Name | Photo | Description |
|---|---|---|
| CDT E/0-10 |  | Speed control for EC motors |